# Project : MT6873, LPDDR4X (SBS)
## REF_SCH TOP LEVEL

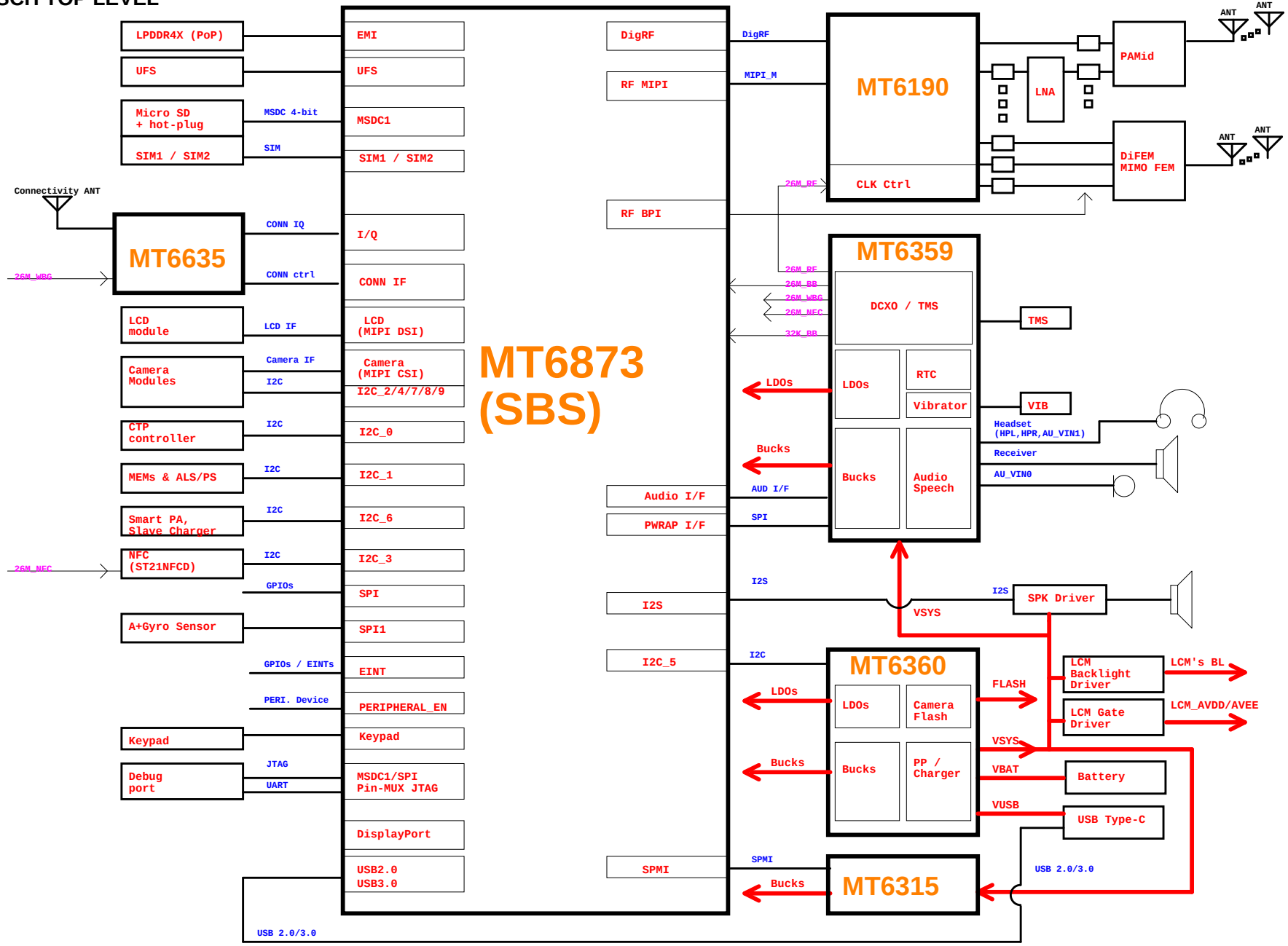


| | |
|---|---|
| MI PHONE | |
| Title | MT6873_5GA |
| Size C | Document Number Diagram |
| Rev P0 | |
| Date: Thursday, March 05, 2020 | Sheet 1 of 73 |

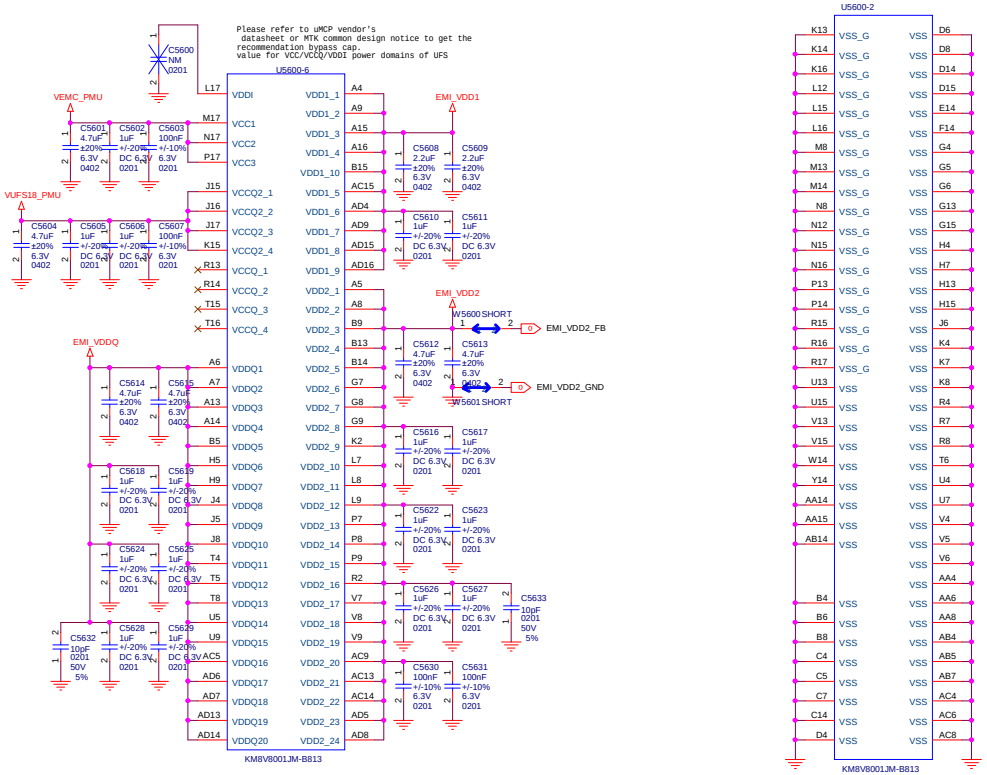





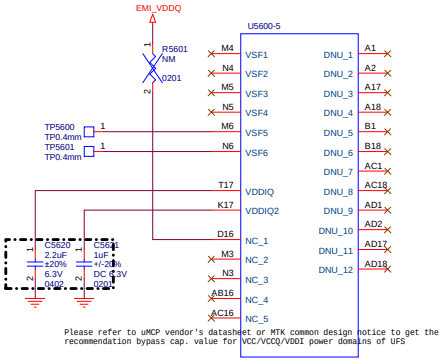


| | | |
|---|---|---|
| Title | MT6873_5GA | |
| Size C | Document Number MEMORY | Rev P0 |
| Date: Tuesday, March 24, 2020 | Sheet 1 of 2 | |

# BTB CONNECTOR

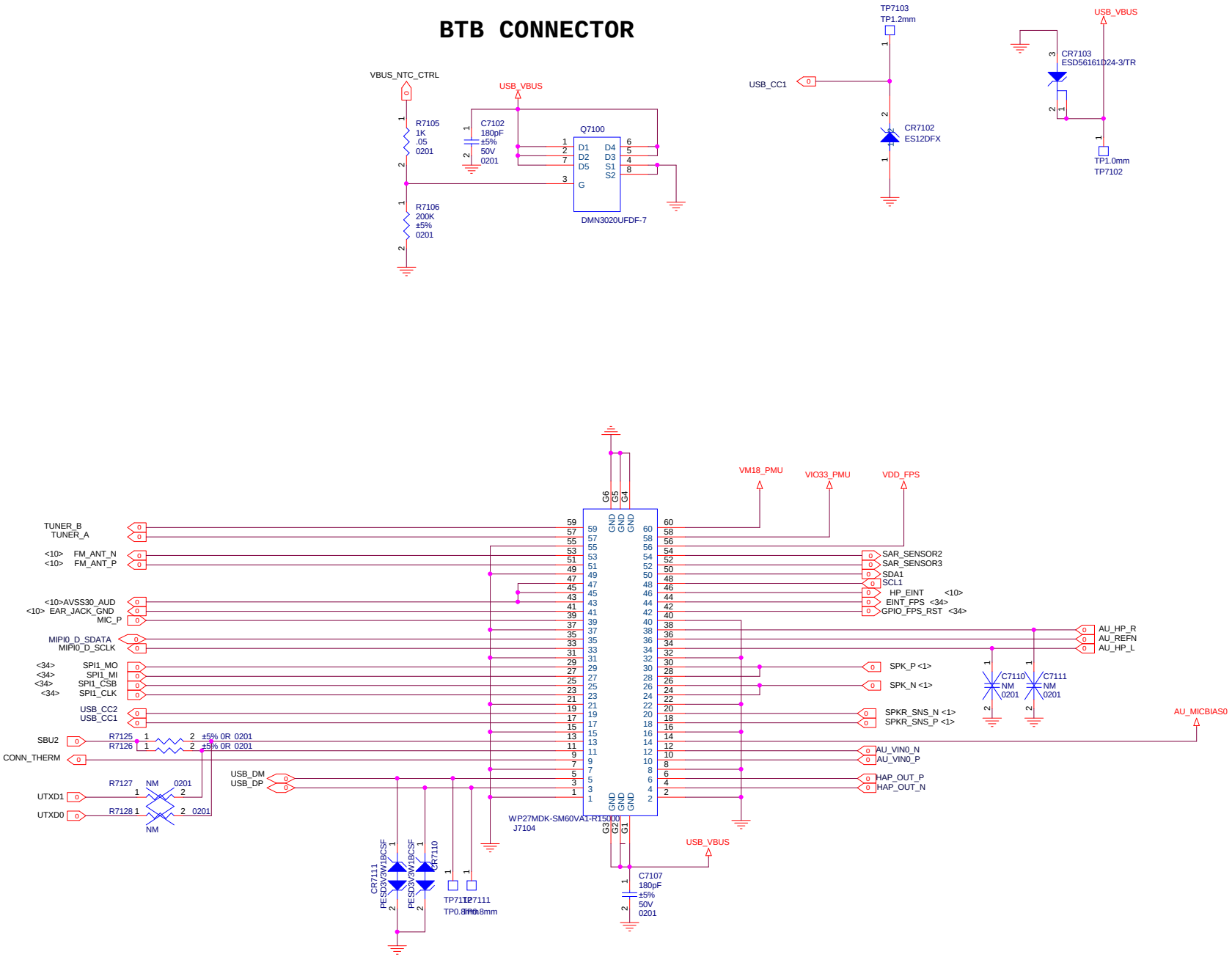


| | | |
|---|---|---|
| MI PHONE | | |
| Title: MT6873_5GA | | |
| Size: A3 | Document Number: USB CONNECTOR | Rev: A |
| Date: Tuesday, March 24, 2020 | Sheet 1 of 1 | |

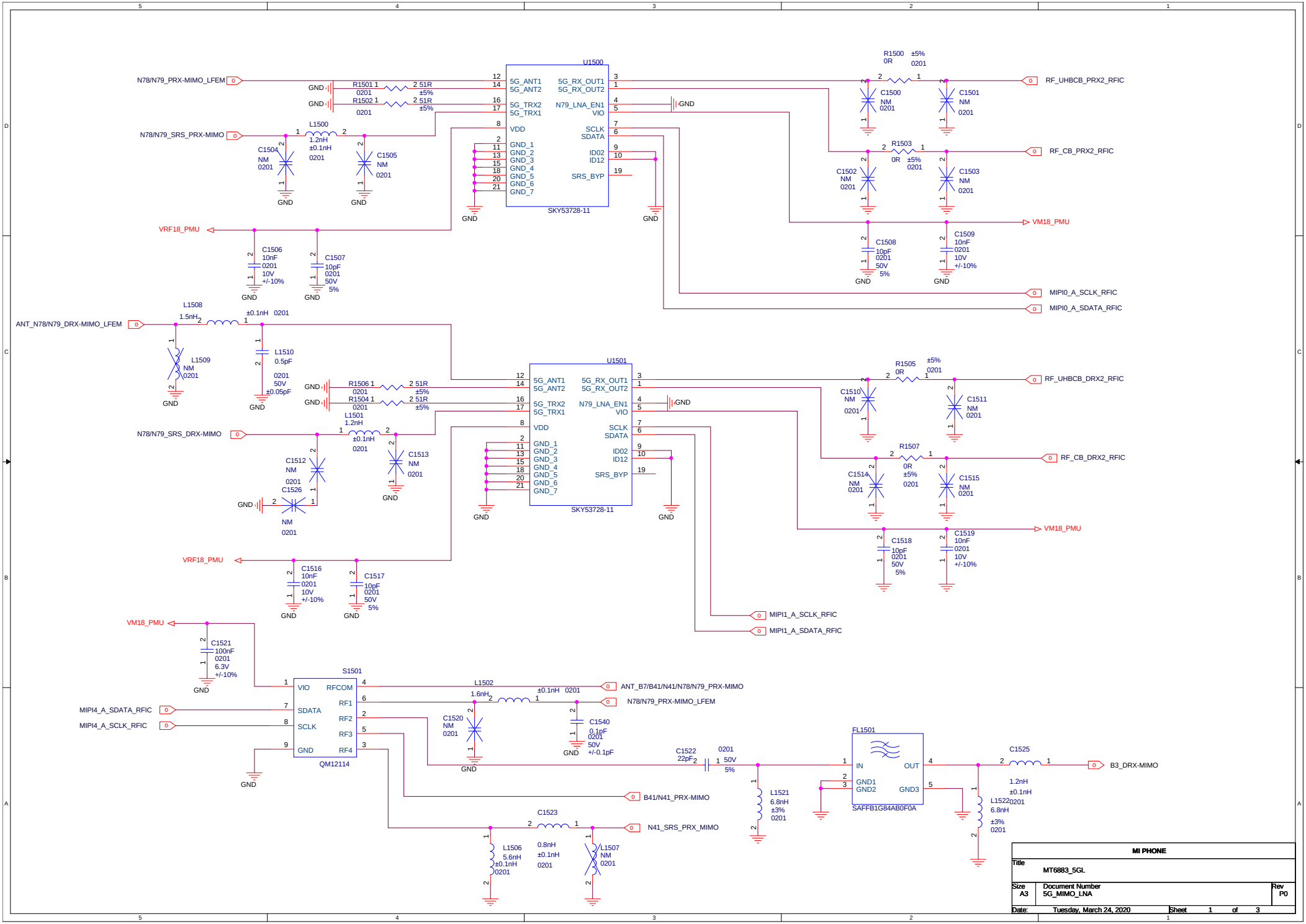
U1500
SKY53728-11
5G_ANT1
5G_ANT2
5G_TRX2
5G_TRX1
VDD
GND_1
GND_2
GND_3
GND_4
GND_5
GND_6
GND_7
5G_RX_OUT1
5G_RX_OUT2
N79_LNA_EN1
VIO
SCLK
SDATA
ID02
ID12
SRS_BYP
N78/N79_PRX-MIMO_LFEM
N78/N79_SRS_PRX-MIMO
R1501 51R ±5% 0201
R1502 51R ±5% 0201
L1500 1.2nH ±0.1nH 0201
C1504 NM 0201
C1505 NM 0201
VRF18_PMU
C1506 10nF 0201 10V +/-10%
C1507 10pF 0201 50V 5%
R1500 0R ±5% 0201
C1500 NM 0201
C1501 NM 0201
RF_UHBCB_PRX2_RFIC
R1503 0R ±5% 0201
C1502 NM 0201
C1503 NM 0201
RF_CB_PRX2_RFIC
VM18_PMU
C1508 10pF 0201 50V 5%
C1509 10nF 0201 10V +/-10%
MIPI0_A_SCLK_RFIC
MIPI0_A_SDATA_RFIC
ANT_N78/N79_DRX-MIMO_LFEM
L1508 1.5nH ±0.1nH 0201
L1509 NM 0201
L1510 0.5pF 0201 50V ±0.05pF
U1501
SKY53728-11
R1506 51R ±5% 0201
R1504 51R ±5% 0201
N78/N79_SRS_DRX-MIMO
L1501 1.2nH ±0.1nH 0201
C1512 NM 0201
C1526 NM 0201
C1513 NM 0201
VRF18_PMU
C1516 10nF 0201 10V +/-10%
C1517 10pF 0201 50V 5%
R1505 0R ±5% 0201
C1510 NM 0201
C1511 NM 0201
RF_UHBCB_DRX2_RFIC
R1507 0R ±5% 0201
C1514 NM 0201
C1515 NM 0201
RF_CB_DRX2_RFIC
VM18_PMU
C1518 10pF 0201 50V 5%
C1519 10nF 0201 10V +/-10%
MIPI1_A_SCLK_RFIC
MIPI1_A_SDATA_RFIC
VM18_PMU
C1521 100nF 0201 6.3V +/-10%
S1501
QM12114
VIO
SDATA
SCLK
GND
RFCOM
RF1
RF2
RF3
RF4
MIPI4_A_SDATA_RFIC
MIPI4_A_SCLK_RFIC
L1502 1.6nH ±0.1nH 0201
ANT_B7/B41/N41/N78/N79_PRX-MIMO
N78/N79_PRX-MIMO_LFEM
C1520 NM 0201
C1540 0.1pF 0201 50V +/-0.1pF
C1522 22pF 0201 50V 5%
B41/N41_PRX-MIMO
C1523 0.8nH ±0.1nH 0201
N41_SRS_PRX_MIMO
L1506 5.6nH ±0.1nH 0201
L1507 NM 0201
FL1501
SAFFB1G84AB0F0A
IN
OUT
GND1
GND2
GND3
L1521 6.8nH ±3% 0201
C1525 1.2nH ±0.1nH 0201
L1522 6.8nH ±3% 0201
B3_DRX-MIMO
MI PHONE
Title
MT6883_5GL
Size A3
Document Number 5G_MIMO_LNA
Rev P0
Date: Tuesday, March 24, 2020
Sheet 1 of 3

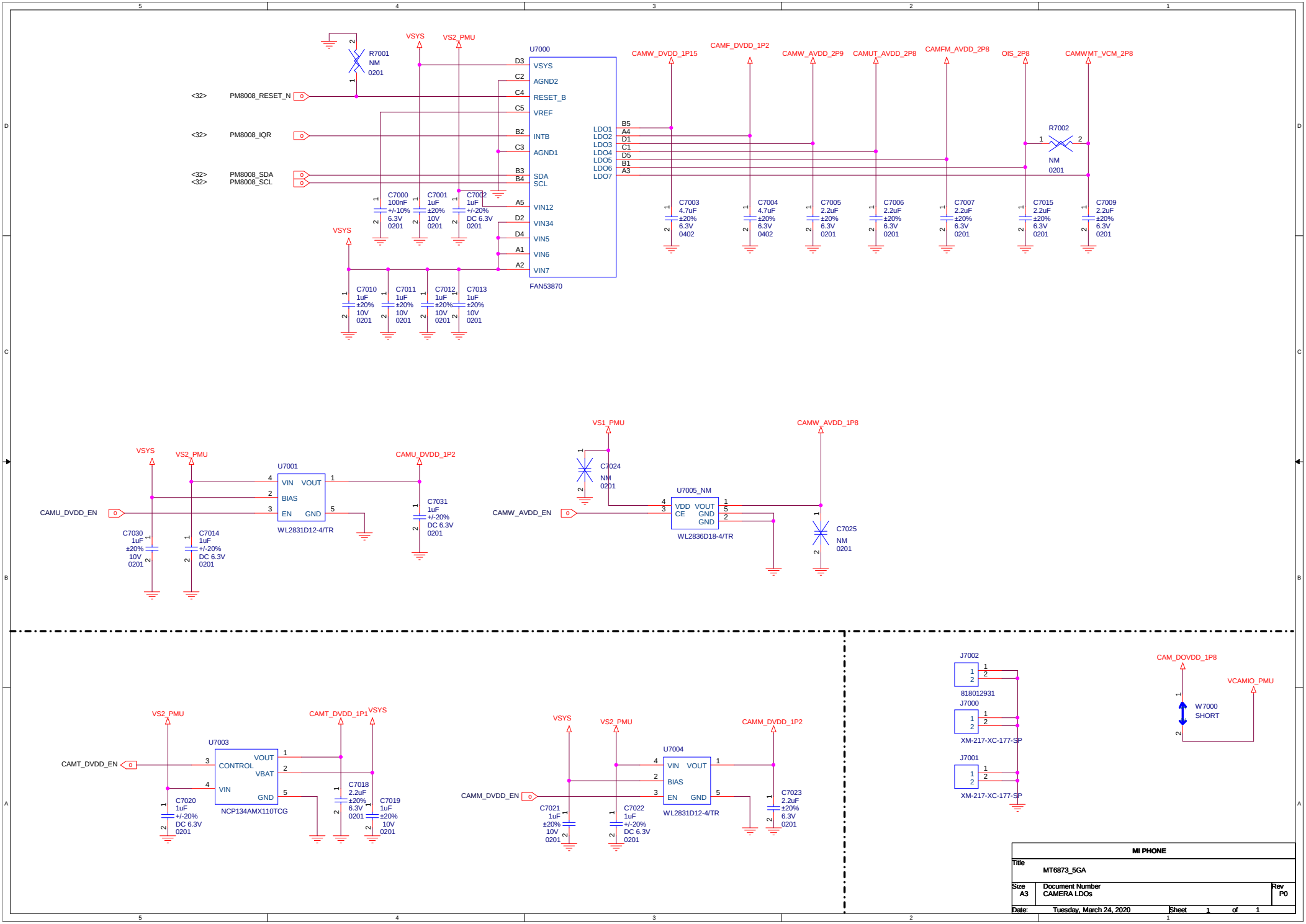
U7000
FAN53870
VSYS
VS2_PMU
R7001
NM
0201
<32> PM8008_RESET_N
<32> PM8008_IQR
<32> PM8008_SDA
<32> PM8008_SCL
D3 VSYS
C2 AGND2
C4 RESET_B
C5 VREF
B2 INTB
C3 AGND1
B3 SDA
B4 SCL
A5 VIN12
D2 VIN34
D4 VIN5
A1 VIN6
A2 VIN7
LDO1 B5
LDO2 A4
LDO3 D1
LDO4 C1
LDO5 D5
LDO6 B1
LDO7 A3
CAMW_DVDD_1P15
CAMF_DVDD_1P2
CAMW_AVDD_2P9
CAMUT_AVDD_2P8
CAMFM_AVDD_2P8
OIS_2P8
CAMWMT_VCM_2P8
R7002
NM
0201
C7000 100nF +/-10% 6.3V 0201
C7001 1uF ±20% 10V 0201
C7002 1uF +/-20% DC 6.3V 0201
C7003 4.7uF ±20% 6.3V 0402
C7004 4.7uF ±20% 6.3V 0402
C7005 2.2uF ±20% 6.3V 0201
C7006 2.2uF ±20% 6.3V 0201
C7007 2.2uF ±20% 6.3V 0201
C7015 2.2uF ±20% 6.3V 0201
C7009 2.2uF ±20% 6.3V 0201
C7010 1uF ±20% 10V 0201
C7011 1uF ±20% 10V 0201
C7012 1uF ±20% 10V 0201
C7013 1uF ±20% 10V 0201
U7001
WL2831D12-4/TR
VIN VOUT
BIAS
EN GND
CAMU_DVDD_EN
CAMU_DVDD_1P2
C7030 1uF ±20% 10V 0201
C7014 1uF +/-20% DC 6.3V 0201
C7031 1uF +/-20% DC 6.3V 0201
VS1_PMU
CAMW_AVDD_1P8
C7024 NM 0201
U7005_NM
WL2836D18-4/TR
VDD VOUT
CE GND
GND
CAMW_AVDD_EN
C7025 NM 0201
U7003
NCP134AMX110TCG
CONTROL VOUT
VBAT
VIN GND
CAMT_DVDD_EN
CAMT_DVDD_1P1
C7020 1uF +/-20% DC 6.3V 0201
C7018 2.2uF ±20% 6.3V 0201
C7019 1uF ±20% 10V 0201
U7004
WL2831D12-4/TR
CAMM_DVDD_EN
CAMM_DVDD_1P2
C7021 1uF ±20% 10V 0201
C7022 1uF +/-20% DC 6.3V 0201
C7023 2.2uF ±20% 6.3V 0201
J7002
818012931
J7000
XM-217-XC-177-SP
J7001
XM-217-XC-177-SP
CAM_DOVDD_1P8
VCAMIO_PMU
W7000
SHORT
MI PHONE
Title
MT6873_5GA
Size A3
Document Number
CAMERA LDOs
Rev P0
Date: Tuesday, March 24, 2020
Sheet 1 of 1

# J7A_Flash

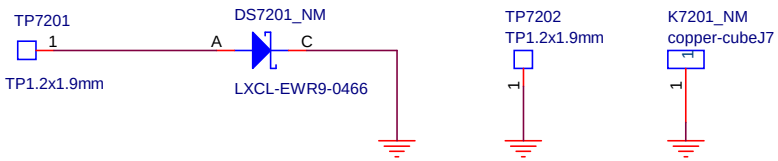


# J7B_Flash

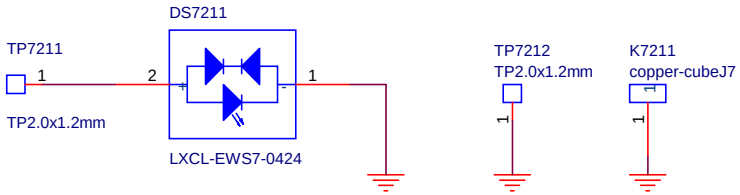


| | | |
|---|---|---|
| Title | J7 WLED | |
| Size A4 | Document Number <Doc> | Rev P0 |
| Date: Thursday, March 12, 2020 | Sheet 1 of 1 | |

# Sub-6G_ANT1 & N41 MIMO

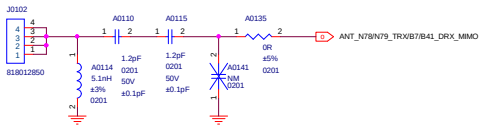


# Sub-6G_ANT2

# 4X4_MIMO_ANT4

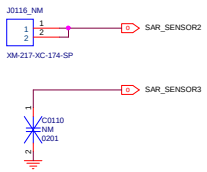


# DRX_LB+41_N1_ANT_SWITCH

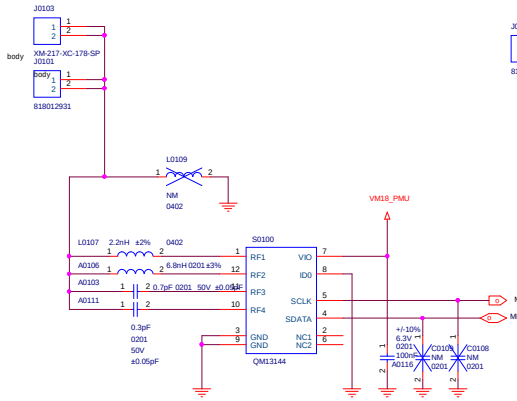


# DRX_LB+41_N1_ANT_FED

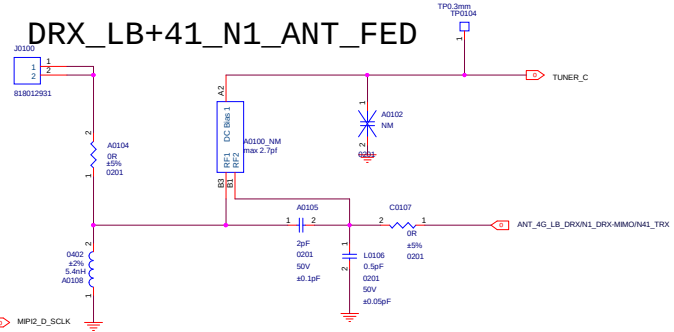


# DRX_MHB

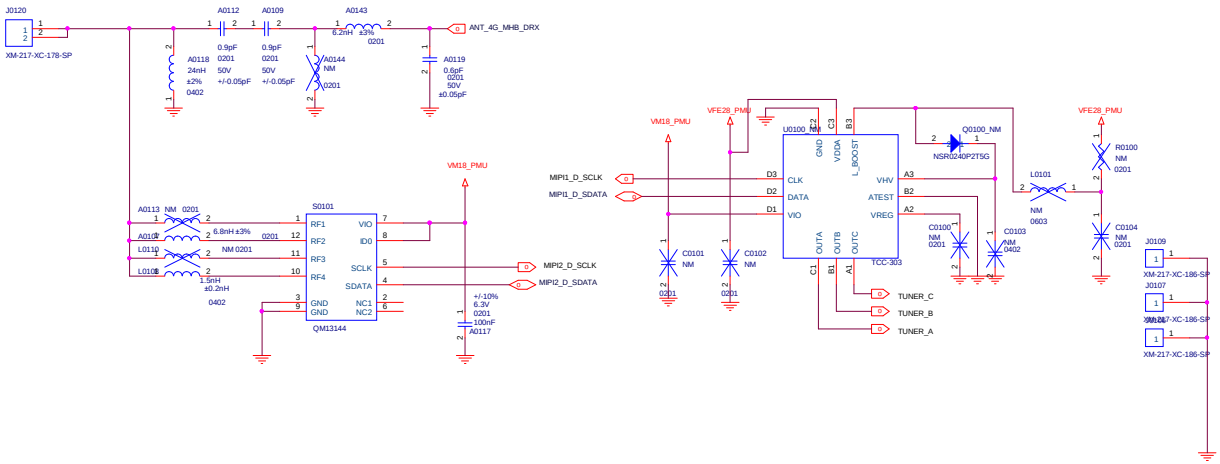


# Combo ANT

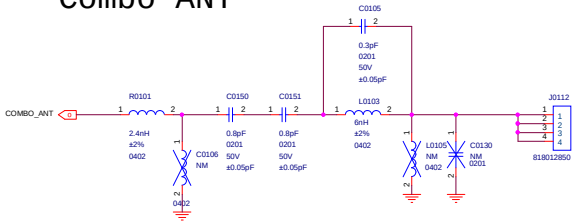


# 5G_WIFI_ANT1

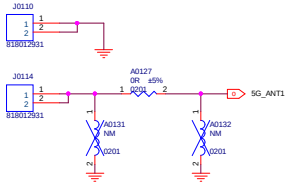


# 5G_2.4G_WIFI_ANT2

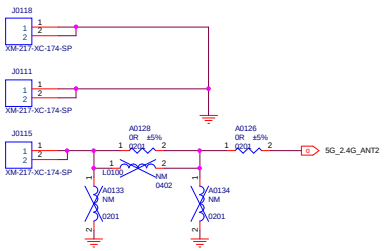


| | | |
|---|---|---|
| Title | F10 MAIN | |
| Size A2 | Document Number <Doc> | Rev P0 |
| Date: Tuesday, March 24, 2020 | Sheet 1 of 1 | |

# UFS2.1

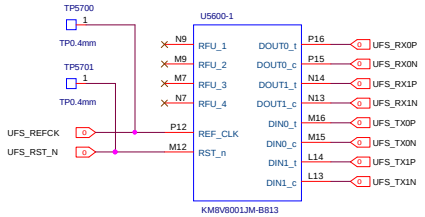


# LPDDR4/4x

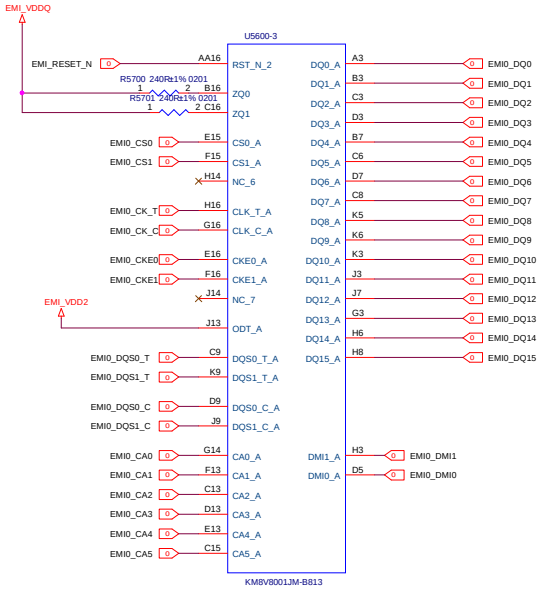


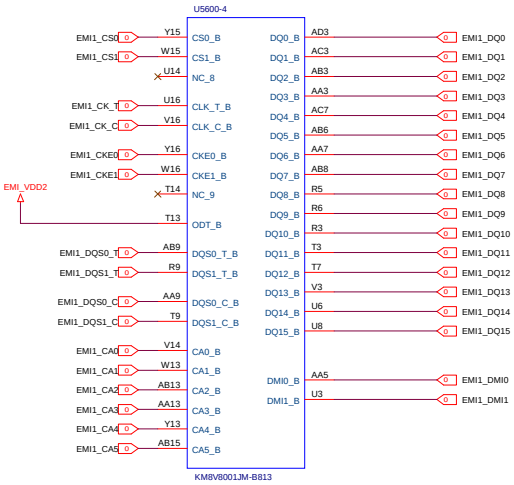


| MI PHONE | | |
|---|---|---|
| Title | MT6873_5GA | |
| Size C | Document Number DDR4X | Rev |
| Date: Tuesday, March 24, 2020 | Sheet 2 of 2 | |

## NR_PAMid_n41_SatPA_ET1_NR1/ET Ref design

## L+MH_PAMIid_ET

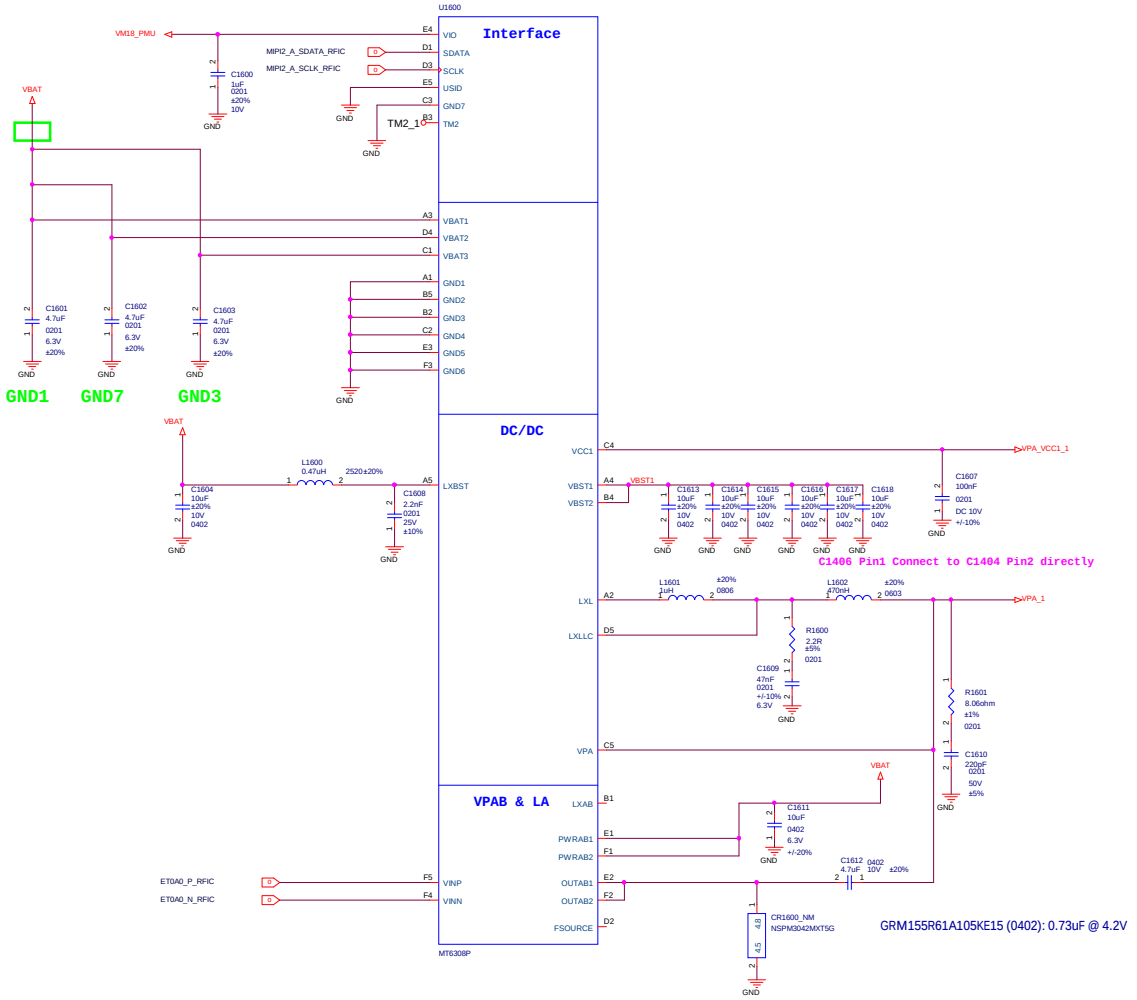


| | | |
|---|---|---|
| MI PHONE | | |
| Title: MT6883_5GL | | |
| Size: A2 | Document Number: RF_4G_DCDC | Rev: P0 |
| Date: Tuesday, March 24, 2020 | Sheet 2 of 3 | |

# NR_PAMid + n41 PAD /APT Ref Design

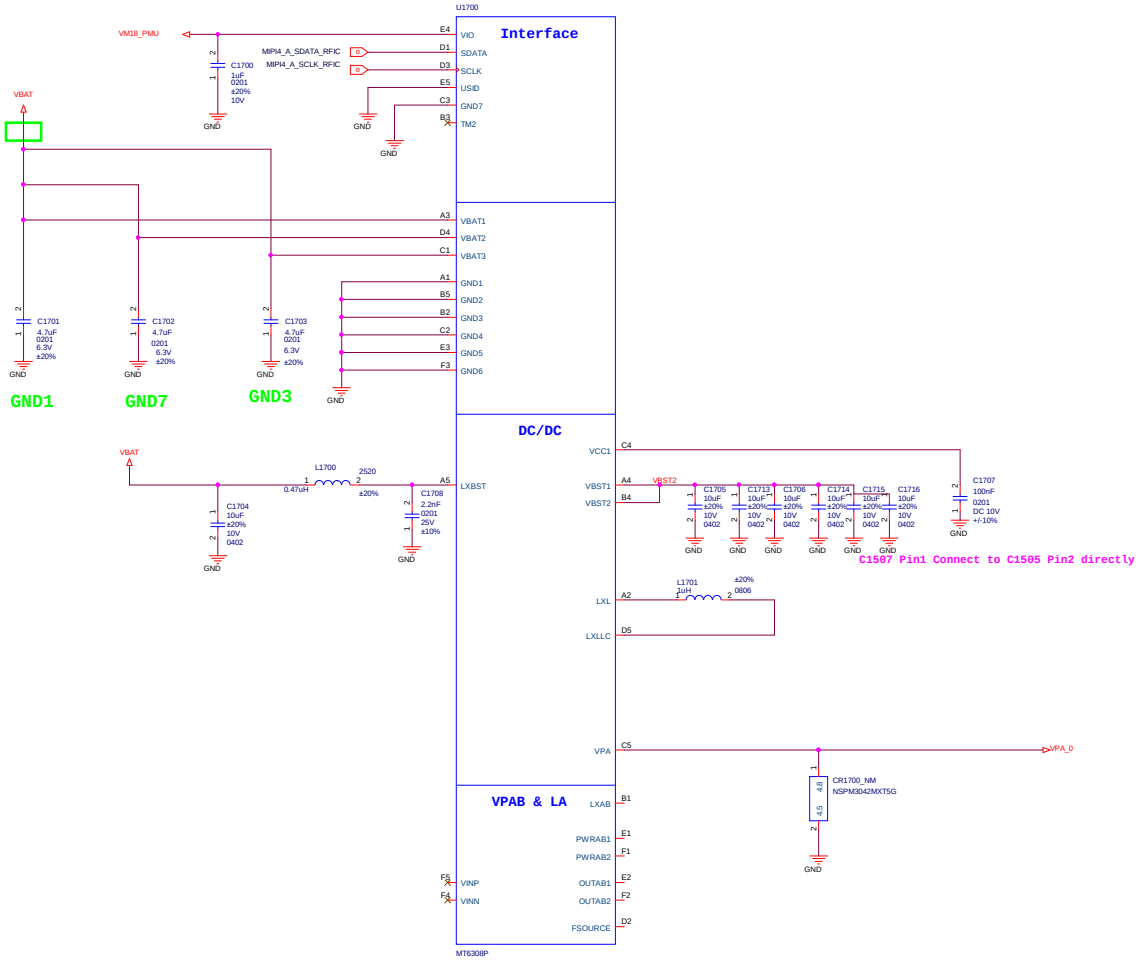


| | | | |
|---|---|---|---|
| MI PHONE | | | |
| Title | MT6883_5GL | | |
| Size A2 | Document Number RF_5G_DCDC | | Rev P0 |
| Date: Tuesday, March 24, 2020 | Sheet 3 of 3 | | |

| MI PHONE | | |
|---|---|---|
| Title | MT6883_5GL | |
| Size A2 | Document Number Reserved(for ANTs) | Rev P0 |
| Date: Tuesday, January 14, 2020 | Sheet 4 of 73 | |

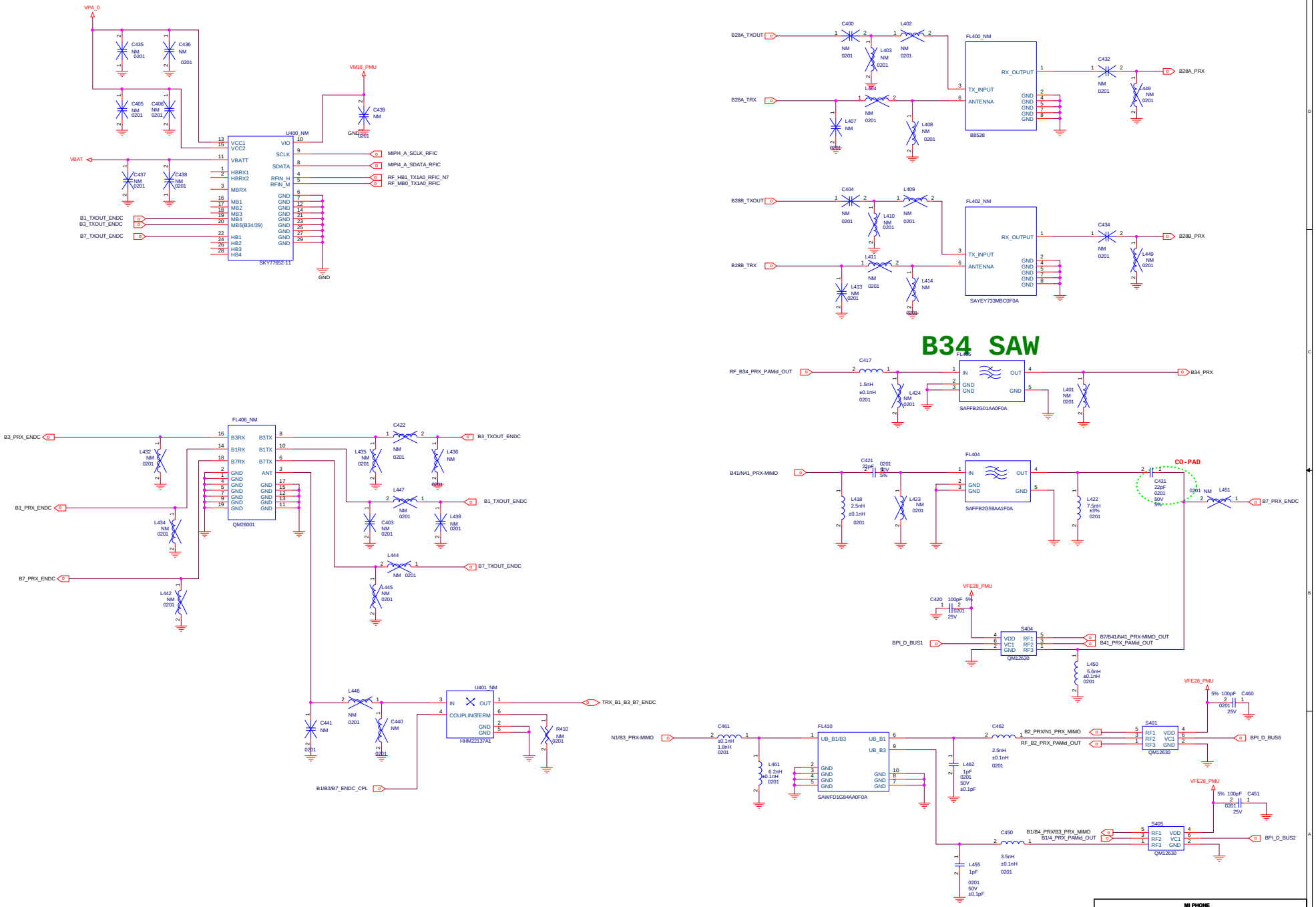


| | | | |
|---|---|---|---|
| Title | MI PHONE<br>MT6883_5GL | | |
| Size A2 | Document Number PRX | | Rev P0 |
| Date: Tuesday, March 24, 2020 | | Sheet 04 of 73 | |

# ANT0(4G_TX+PRX)

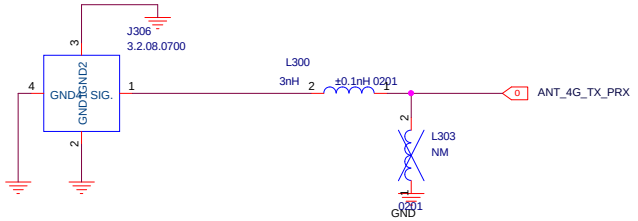


# ANT4(N1_PRX_MIMO/N41/N78/N79_DRX/N1_N3_N7)

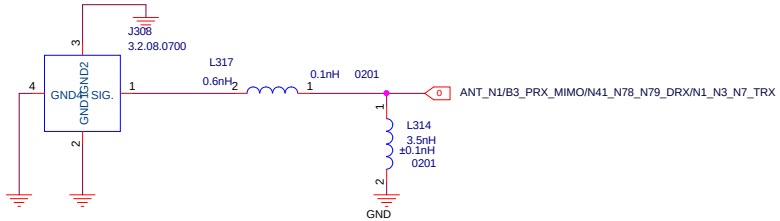


# ANT1(4G_LB_DRX/N1_DRX-MIMO/N41_TRX)

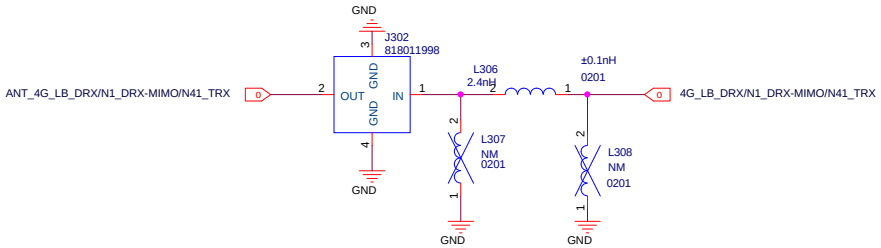


# ANT5(B7/B41/N41/N78/N79_PRX-MIMO)

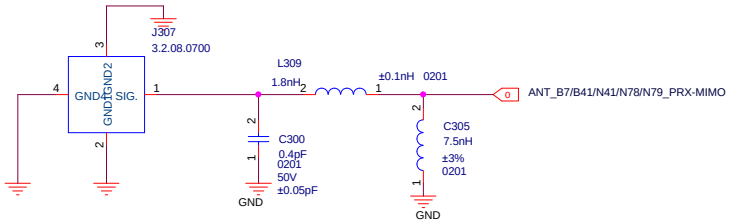


# ANT2(4G_MHB_DRX)

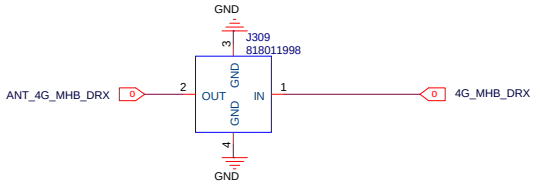


# ANT6(N78/N79_DRX-MIMO)

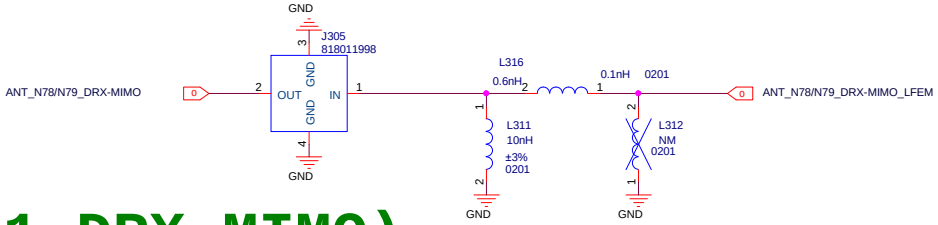


# ANT3(N78/N79_TX+PRX/B7/B41_DRX_MIMO)

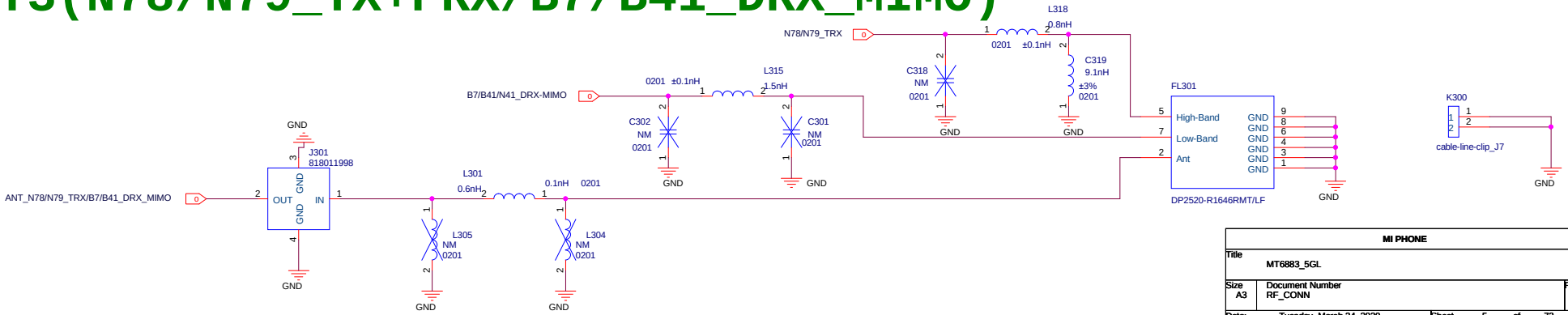


| | | |
|---|---|---|
| MI PHONE | | |
| Title: MT6883_5GL | | |
| Size: A3 | Document Number: RF_CONN | Rev: P0 |
| Date: Tuesday, March 24, 2020 | Sheet 5 of 73 | |

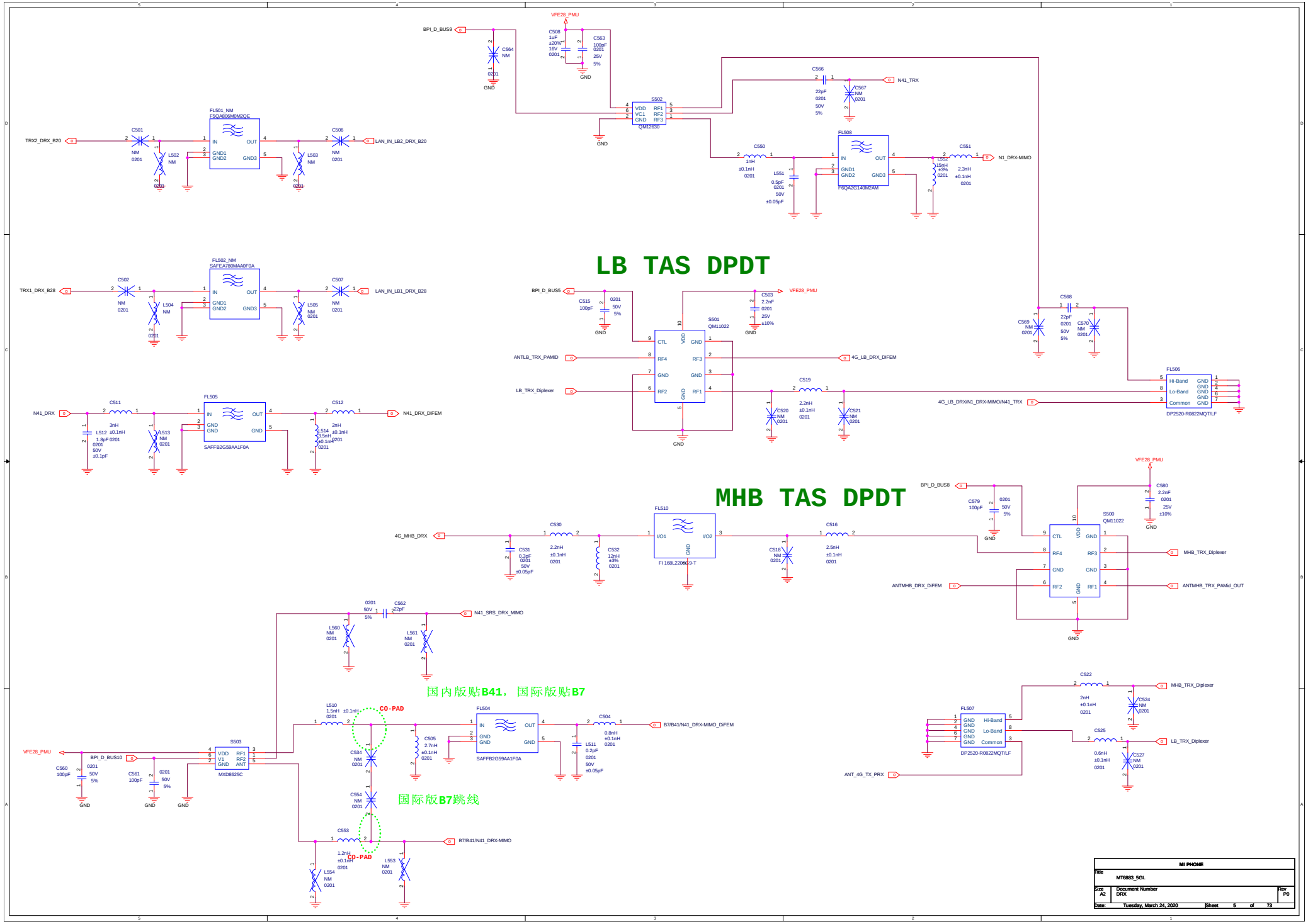
LB TAS DPDT
MHB TAS DPDT
国内版贴B41，国际版贴B7
国际版B7跳线
CO-PAD
CO-PAD
BPI_D_BUS9
VFE28_PMU
C508 1uF ±20% 16V 0201
C563 100pF 0201 25V 5%
C564 NM 0201
GND
S502 QM12630
VDD VC1 GND RF1 RF2 RF3
C566 22pF 0201 50V 5%
C567 NM 0201
N41_TRX
FL508 F6QA2G140M2AM
C550 1nH ±0.1nH 0201
L551 0.5pF 0201 50V ±0.05pF
L552 15nH ±3% 0201
C551 2.3nH ±0.1nH 0201
N1_DRX-MIMO
FL501_NM F5QA806M0M2QE
TRX2_DRX_B20
C501 NM 0201
L502 NM 0201
L503 NM 0201
C506 NM 0201
LAN_IN_LB2_DRX_B20
FL502_NM SAFEA780MAA0F0A
TRX1_DRX_B28
C502 NM 0201
L504 NM 0201
L505 NM 0201
C507 NM 0201
LAN_IN_LB1_DRX_B28
BPI_D_BUS5
C515 100pF 0201 50V 5%
C503 2.2nF 0201 25V ±10%
S501 QM11022
CTL VDD GND RF4 RF3 GND GND RF2 RF1
ANTLB_TRX_PAMID
4G_LB_DRX_DIFEM
LB_TRX_Diplexer
C519 2.2nH ±0.1nH 0201
C520 NM 0201
C521 NM 0201
4G_LB_DRX/N1_DRX-MIMO/N41_TRX
C568 22pF 0201 50V 5%
C569 NM 0201
C570 NM 0201
FL506 DP2520-R0822MQT/LF
Hi-Band Lo-Band Common GND
N41_DRX
C511 3nH ±0.1nH 0201
L512 1.8pF 0201 50V ±0.1pF
L513 NM 0201
FL505 SAFFB2G59AA1F0A
IN OUT GND GND
C512 2nH ±0.1nH 0201
L514 2.5nH ±0.1nH 0201
N41_DRX_DIFEM
BPI_D_BUS8
C579 100pF 0201 50V 5%
C580 2.2nF 0201 25V ±10%
S500 QM11022
MHB_TRX_Diplexer
ANTMHB_DRX_DIFEM
ANTMHB_TRX_PAMid_OUT
4G_MHB_DRX
C530 2.2nH ±0.1nH 0201
C531 0.3pF 0201 50V ±0.05pF
C532 12nH ±3% 0201
FL510 FI 168L2200019-T
I/O1 I/O2 GND
C518 NM 0201
C516 2.5nH ±0.1nH 0201
C562 22pF 0201 50V 5%
N41_SRS_DRX_MIMO
L560 NM 0201
L561 NM 0201
L510 1.5nH ±0.1nH 0201
FL504 SAFFB2G59A1F0A
C505 2.7nH ±0.1nH 0201
C504 0.8nH ±0.1nH 0201
L511 0.2pF 0201 50V ±0.05pF
B7/B41/N41_DRX-MIMO_DIFEM
VFE28_PMU
BPI_D_BUS10
C560 100pF 0201 50V 5%
C561 100pF 0201 50V 5%
S503 MXD8625C
VDD V1 GND RF1 RF2 ANT
C534 NM 0201
C554 NM 0201
C553 1.2nH ±0.1nH 0201
L554 NM 0201
L553 NM 0201
B7/B41/N41_DRX-MIMO
C522 2nH ±0.1nH 0201
C524 NM 0201
MHB_TRX_Diplexer
FL507 DP2520-R0822MQT/LF
C525 0.6nH ±0.1nH 0201
C527 NM 0201
LB_TRX_Diplexer
ANT_4G_TX_PRX
MI PHONE
Title
MT6893_5GL
Size A2
Document Number DRX
Rev P0
Date: Tuesday, March 24, 2020
Sheet 5 of 73

| MI PHONE | | |
|---|---|---|
| Title MT6883_5GL | | |
| Size A3 | Document Number SWITCH | Rev P0 |
| Date: Tuesday, January 14, 2020 | Sheet 6 of 73 | |

# MLNA_PRX

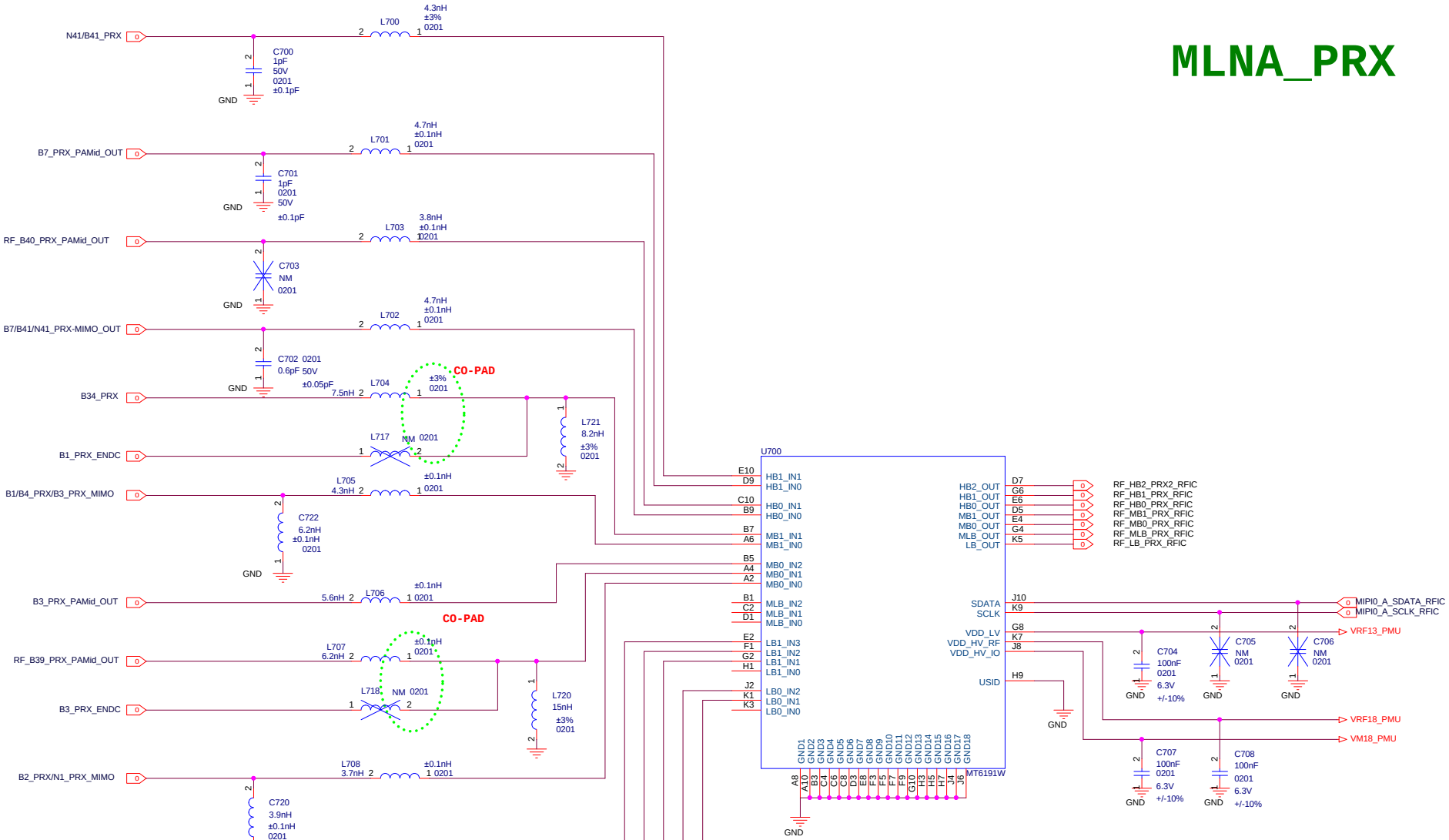


| | | |
|---|---|---|
| MI PHONE | | |
| Title: MT6883_5GL | | |
| Size: A3 | Document Number: PRX_LNA | Rev: P0 |
| Date: Tuesday, March 24, 2020 | Sheet 7 of 73 | |

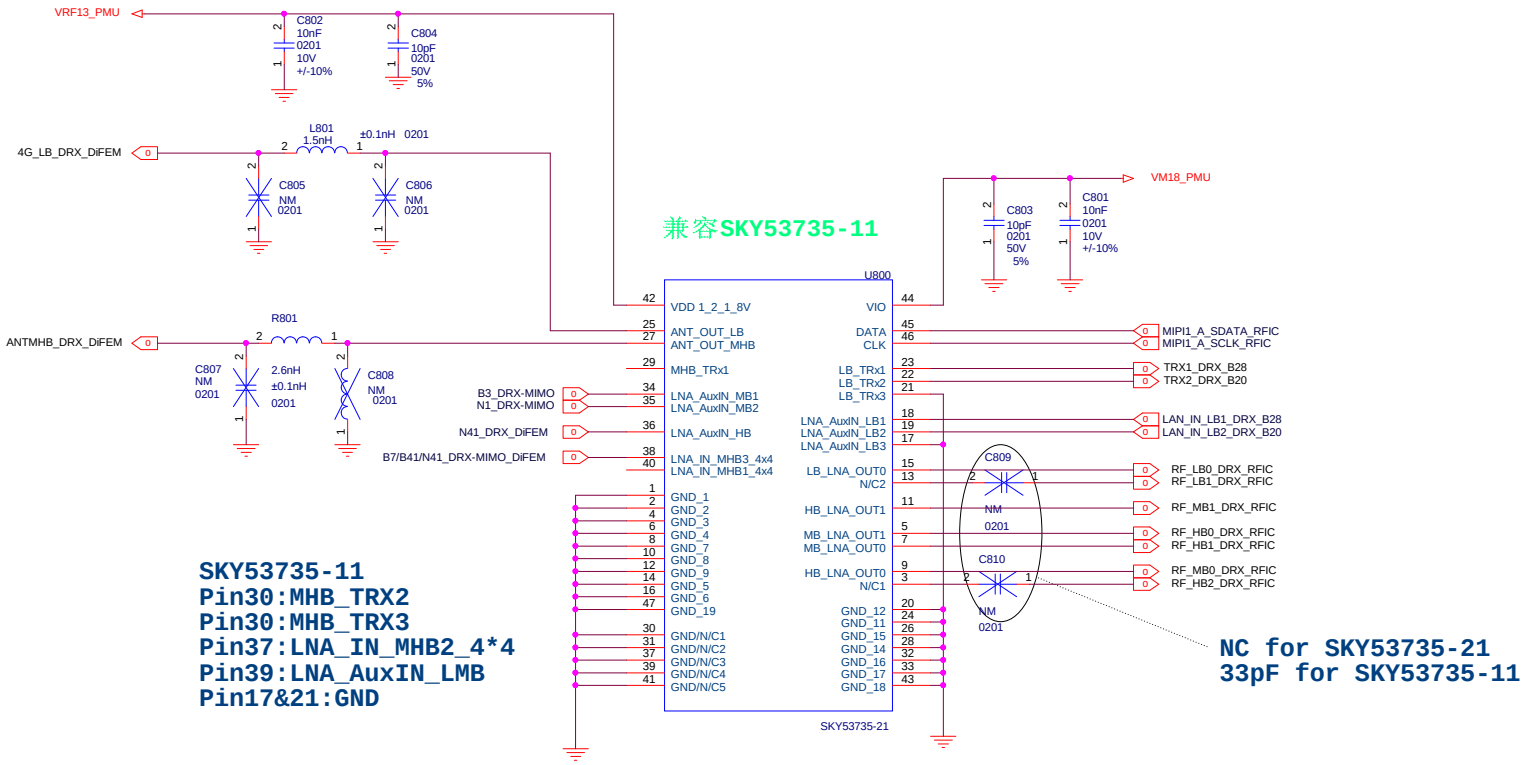


| MI PHONE | | |
|---|---|---|
| Title: MT6883_5GL | | |
| Size: A3 | Document Number: DRX_LNA | Rev: P0 |
| Date: Tuesday, March 24, 2020 | Sheet 8 of 73 | |

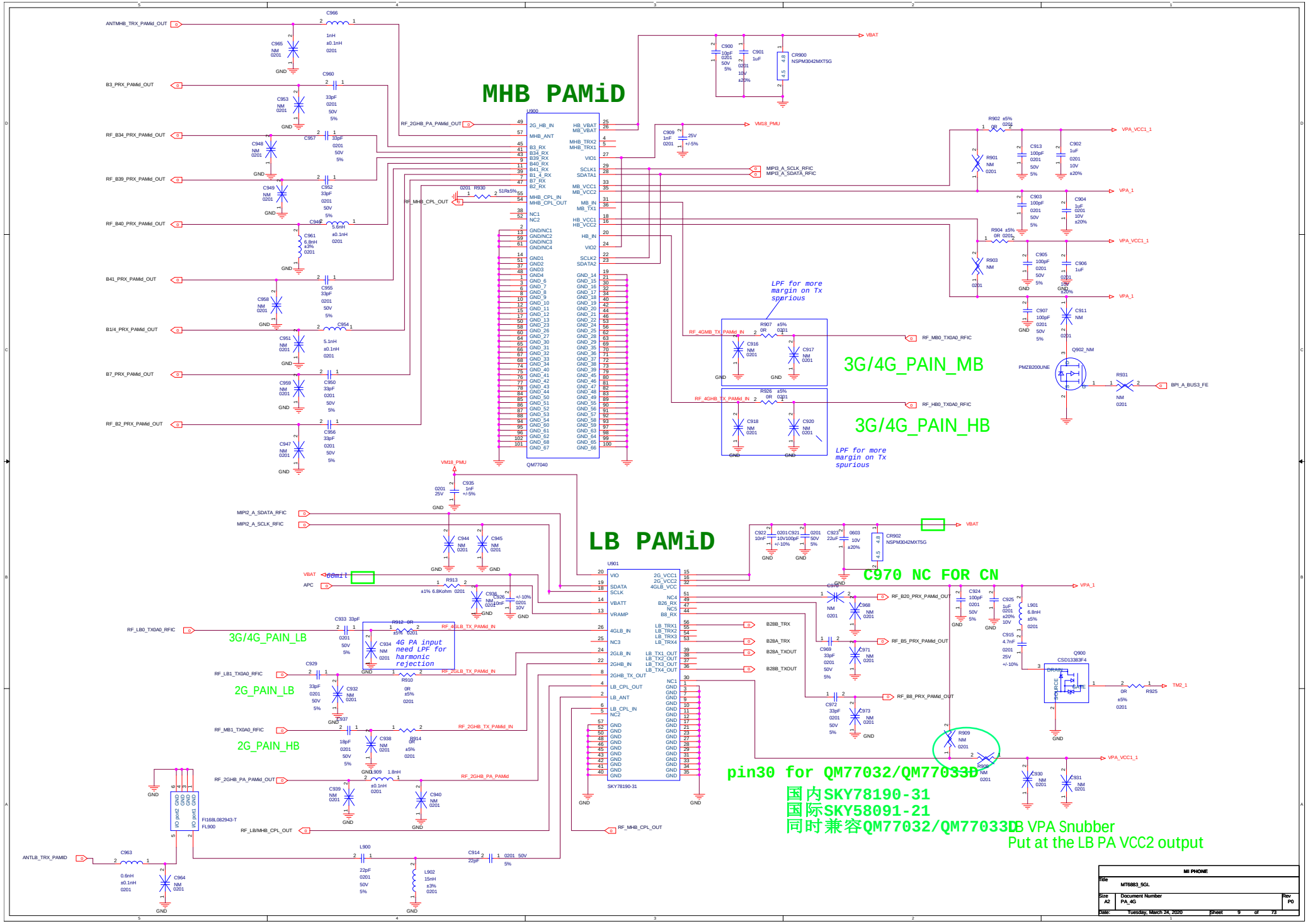
MHB PAMiD
LB PAMiD
U900
QM77040
U901
SKY78190-31
3G/4G_PAIN_MB
3G/4G_PAIN_HB
3G/4G_PAIN_LB
2G_PAIN_LB
2G_PAIN_HB
LPF for more margin on Tx spurious
4G PA input need LPF for harmonic rejection
C970 NC FOR CN
pin30 for QM77032/QM77033D
国内SKY78190-31
国际SKY58091-21
同时兼容QM77032/QM77033D
LB VPA Snubber
Put at the LB PA VCC2 output
MI PHONE
MT6883_5GL
Document Number
PA_4G
Tuesday, March 24, 2020
Sheet 9 of 73

# n41 PAM

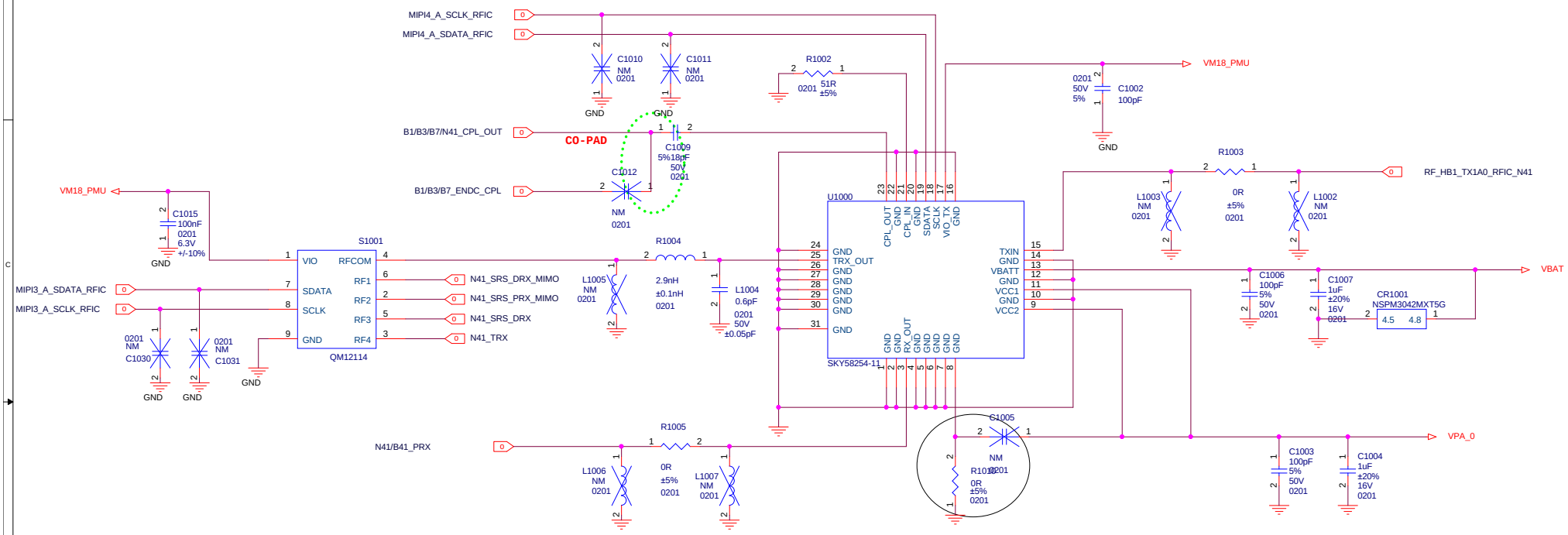


兼容QM75041(PIN8: CAP SW)
SKY58254-11 R1010 0ohm接地
QM75041 C1005 1uF电容

| | | |
|---|---|---|
| MI PHONE | | |
| Title: MT6883_5GL | | |
| Size: A3 | Document Number: PA_5G_N41 | Rev: P0 |
| Date: Tuesday, March 24, 2020 | Sheet 10 of 73 | |

# NR N77/N78/N79 PAMID 0(Main)
# TX1A0

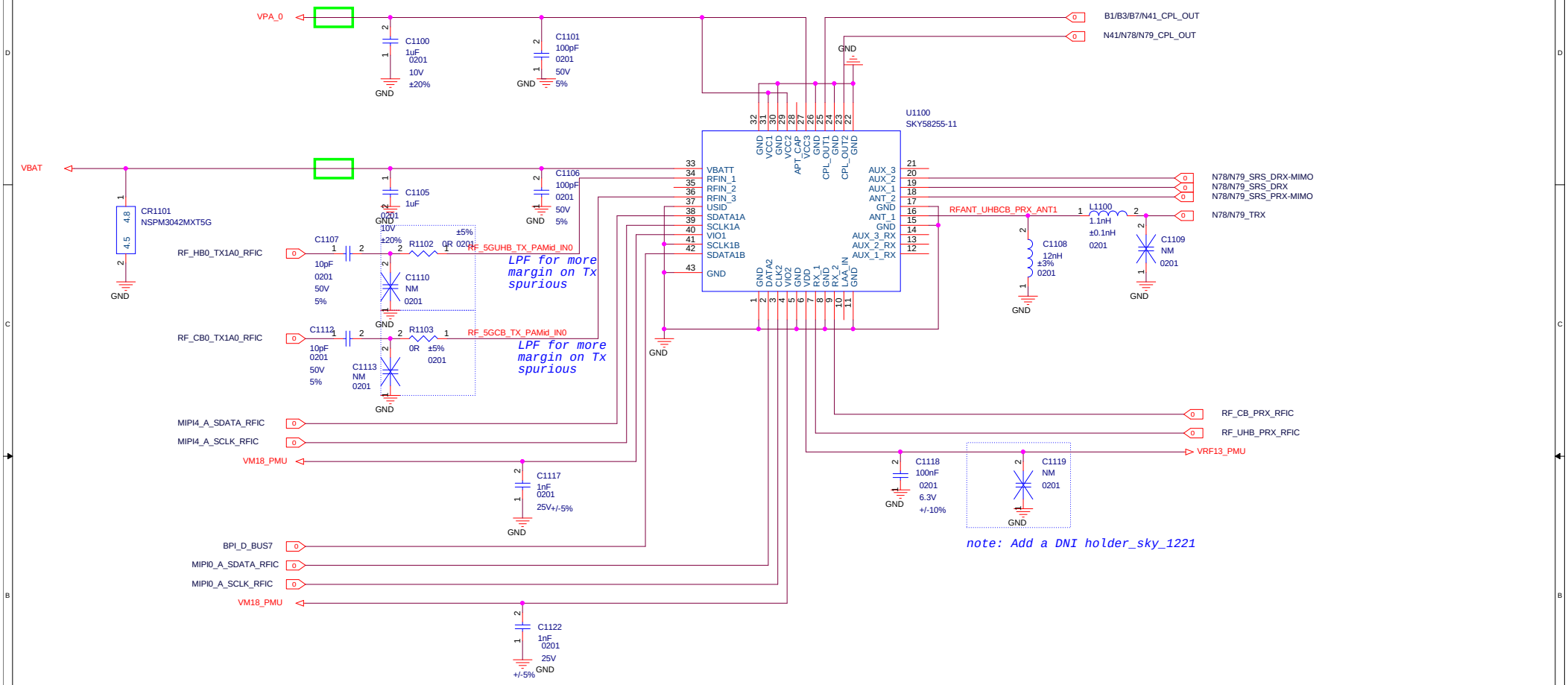


| | | |
|---|---|---|
| MI PHONE | | |
| Title: MT6883_5GL | | |
| Size: A3 | Document Number: PA_5G_TX0_N78_N79 | Rev: P0 |
| Date: Tuesday, March 24, 2020 | Sheet 11 of 73 | |

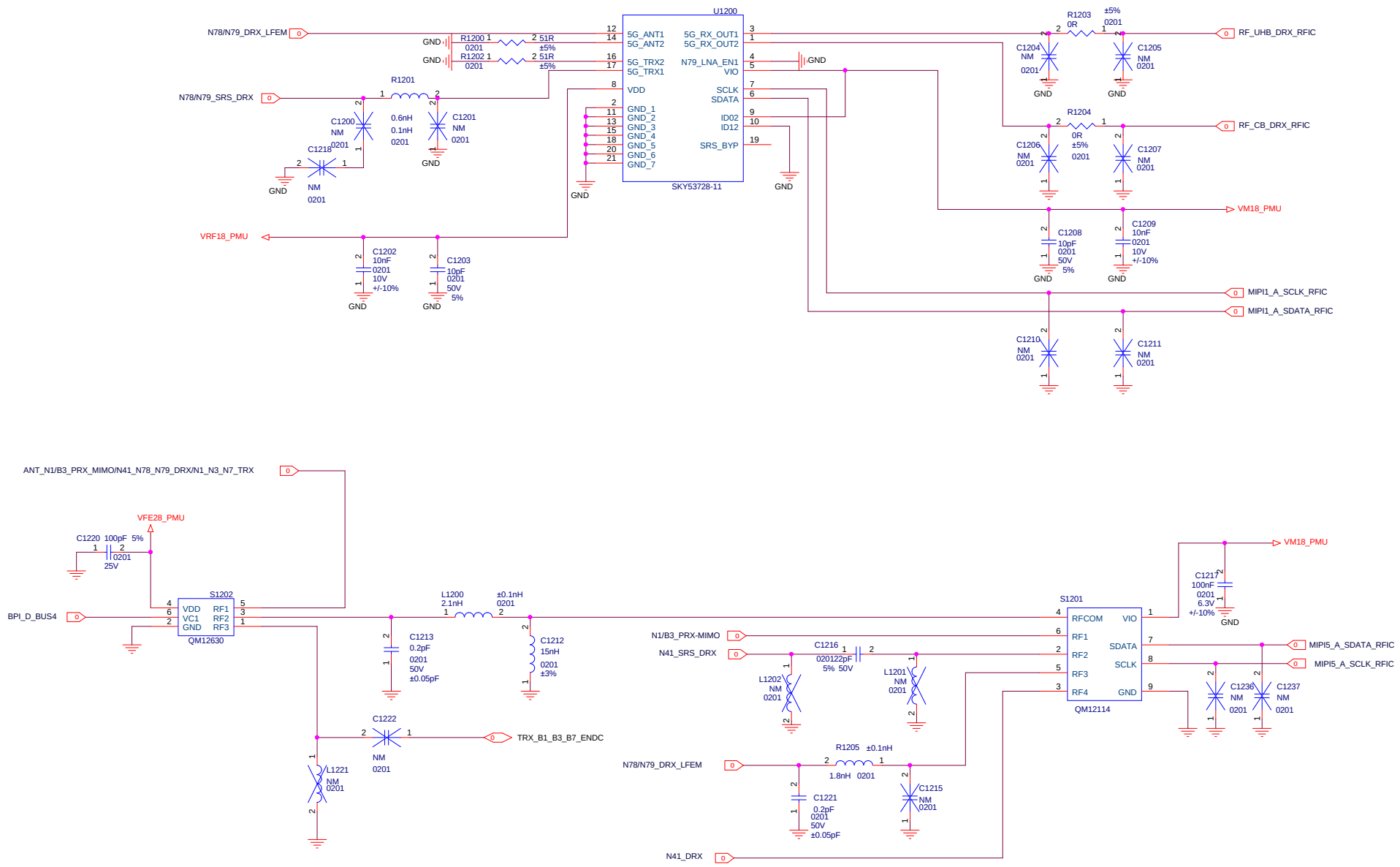


| | |
|---|---|
| MI PHONE | |
| Title | MT6883_5GL |
| Size A3 | Document Number PA_5G_TX1_N78_N79 |
| Rev | |
| Date: Tuesday, March 24, 2020 | Sheet 12 of 73 |

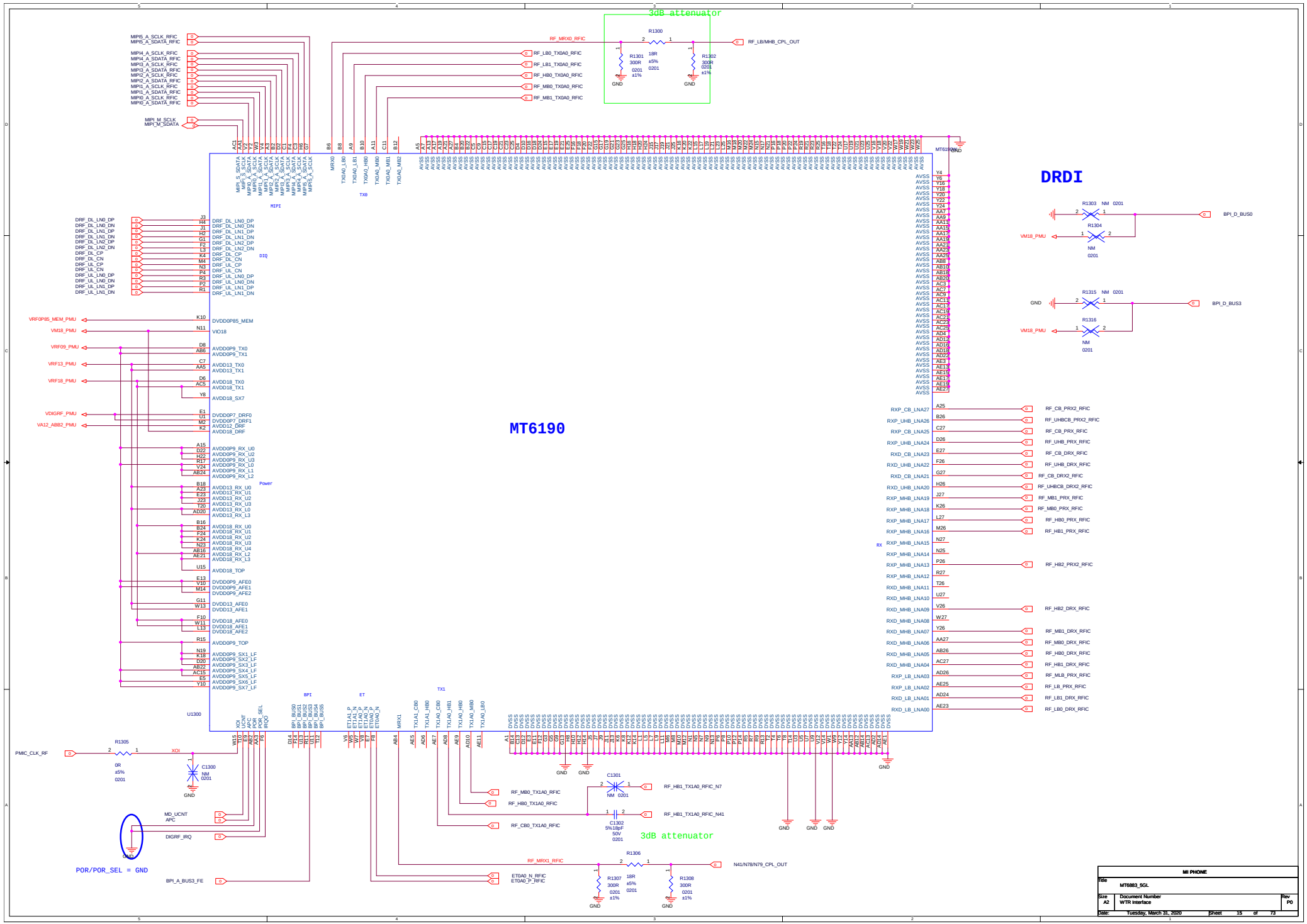
MT6190
DRDI
3dB attenuator
3dB attenuator
R1300
R1301 300R 0201 ±1%
R1302 300R 0201 ±1%
RF_MRX0_RFIC
RF_LB/MHB_CPL_OUT
RF_LB0_TX0A0_RFIC
RF_LB1_TX0A0_RFIC
RF_HB0_TX0A0_RFIC
RF_MB0_TX0A0_RFIC
RF_MB1_TX0A0_RFIC
MIPI5_A_SCLK_RFIC
MIPI5_A_SDATA_RFIC
MIPI4_A_SCLK_RFIC
MIPI4_A_SDATA_RFIC
MIPI3_A_SCLK_RFIC
MIPI3_A_SDATA_RFIC
MIPI2_A_SCLK_RFIC
MIPI2_A_SDATA_RFIC
MIPI1_A_SCLK_RFIC
MIPI1_A_SDATA_RFIC
MIPI0_A_SCLK_RFIC
MIPI0_A_SDATA_RFIC
MIPI_M_SCLK
MIPI_M_SDATA
MIPI
TX0
DIQ
Power
BPI
ET
TX1
U1300
DRF_DL_LN0_DP
DRF_DL_LN0_DN
DRF_DL_LN1_DP
DRF_DL_LN1_DN
DRF_DL_LN2_DP
DRF_DL_LN2_DN
DRF_DL_CP
DRF_DL_CN
DRF_UL_CP
DRF_UL_CN
DRF_UL_LN0_DP
DRF_UL_LN0_DN
DRF_UL_LN1_DP
DRF_UL_LN1_DN
VRF0P85_MEM_PMU
VM18_PMU
VRF09_PMU
VRF13_PMU
VRF18_PMU
VDIGRF_PMU
VA12_ABB2_PMU
DVDD0P85_MEM
VIO18
AVDD0P9_TX0
AVDD0P9_TX1
AVDD13_TX0
AVDD13_TX1
AVDD18_TX0
AVDD18_TX1
AVDD18_SX7
DVDD0P7_DRF0
DVDD0P7_DRF1
AVDD12_DRF
AVDD18_DRF
AVDD0P9_RX_U0
AVDD0P9_RX_U2
AVDD0P9_RX_U3
AVDD0P9_RX_L0
AVDD0P9_RX_L1
AVDD0P9_RX_L2
AVDD13_RX_U0
AVDD13_RX_U1
AVDD13_RX_U2
AVDD13_RX_U3
AVDD13_RX_L0
AVDD13_RX_L3
AVDD18_RX_U0
AVDD18_RX_U1
AVDD18_RX_U2
AVDD18_RX_U3
AVDD18_RX_U4
AVDD18_RX_L2
AVDD18_RX_L3
AVDD18_TOP
DVDD0P9_AFE0
DVDD0P9_AFE1
DVDD0P9_AFE2
DVDD13_AFE0
DVDD13_AFE1
DVDD18_AFE0
DVDD18_AFE1
DVDD18_AFE2
AVDD0P9_TOP
AVDD0P9_SX1_LF
AVDD0P9_SX2_LF
AVDD0P9_SX3_LF
AVDD0P9_SX4_LF
AVDD0P9_SX5_LF
AVDD0P9_SX6_LF
AVDD0P9_SX7_LF
RX
RXP_CB_LNA27
RXP_UHB_LNA26
RXP_CB_LNA25
RXP_UHB_LNA24
RXD_CB_LNA23
RXD_UHB_LNA22
RXD_CB_LNA21
RXD_UHB_LNA20
RXP_MHB_LNA19
RXP_MHB_LNA18
RXP_MHB_LNA17
RXP_MHB_LNA16
RXP_MHB_LNA15
RXP_MHB_LNA14
RXP_MHB_LNA13
RXP_MHB_LNA12
RXD_MHB_LNA11
RXD_MHB_LNA10
RXD_MHB_LNA09
RXD_MHB_LNA08
RXD_MHB_LNA07
RXD_MHB_LNA06
RXD_MHB_LNA05
RXD_MHB_LNA04
RXP_LB_LNA03
RXP_LB_LNA02
RXD_LB_LNA01
RXD_LB_LNA00
RF_CB_PRX2_RFIC
RF_UHBCB_PRX2_RFIC
RF_CB_PRX_RFIC
RF_UHB_PRX_RFIC
RF_CB_DRX_RFIC
RF_UHB_DRX_RFIC
RF_CB_DRX2_RFIC
RF_UHBCB_DRX2_RFIC
RF_MB1_PRX_RFIC
RF_MB0_PRX_RFIC
RF_HB0_PRX_RFIC
RF_HB1_PRX_RFIC
RF_HB2_PRX2_RFIC
RF_HB2_DRX_RFIC
RF_MB1_DRX_RFIC
RF_MB0_DRX_RFIC
RF_HB0_DRX_RFIC
RF_HB1_DRX_RFIC
RF_MLB_PRX_RFIC
RF_LB_PRX_RFIC
RF_LB1_DRX_RFIC
RF_LB0_DRX_RFIC
R1303 NM 0201
R1304 NM 0201
R1315 NM 0201
R1316 NM 0201
BPI_D_BUS0
BPI_D_BUS3
PMIC_CLK_RF
R1305 0R ±5% 0201
XOI
C1300 NM 0201
MD_UCNT
APC
DIGRF_IRQ
POR/POR_SEL = GND
BPI_A_BUS3_FE
RF_MB0_TX1A0_RFIC
RF_HB0_TX1A0_RFIC
RF_CB0_TX1A0_RFIC
C1301 NM 0201
RF_HB1_TX1A0_RFIC_N7
C1302 5%18pF 50V 0201
RF_HB1_TX1A0_RFIC_N41
RF_MRX1_RFIC
R1306 18R ±5% 0201
N41/N78/N79_CPL_OUT
ET0A0_N_RFIC
ET0A0_P_RFIC
R1307 300R 0201 ±1%
R1308 300R 0201 ±1%
GND
MI PHONE
MT6883_5GL
Document Number
WTR Interface
Rev P0
Size A2
Date: Tuesday, March 31, 2020
Sheet 15 of 73

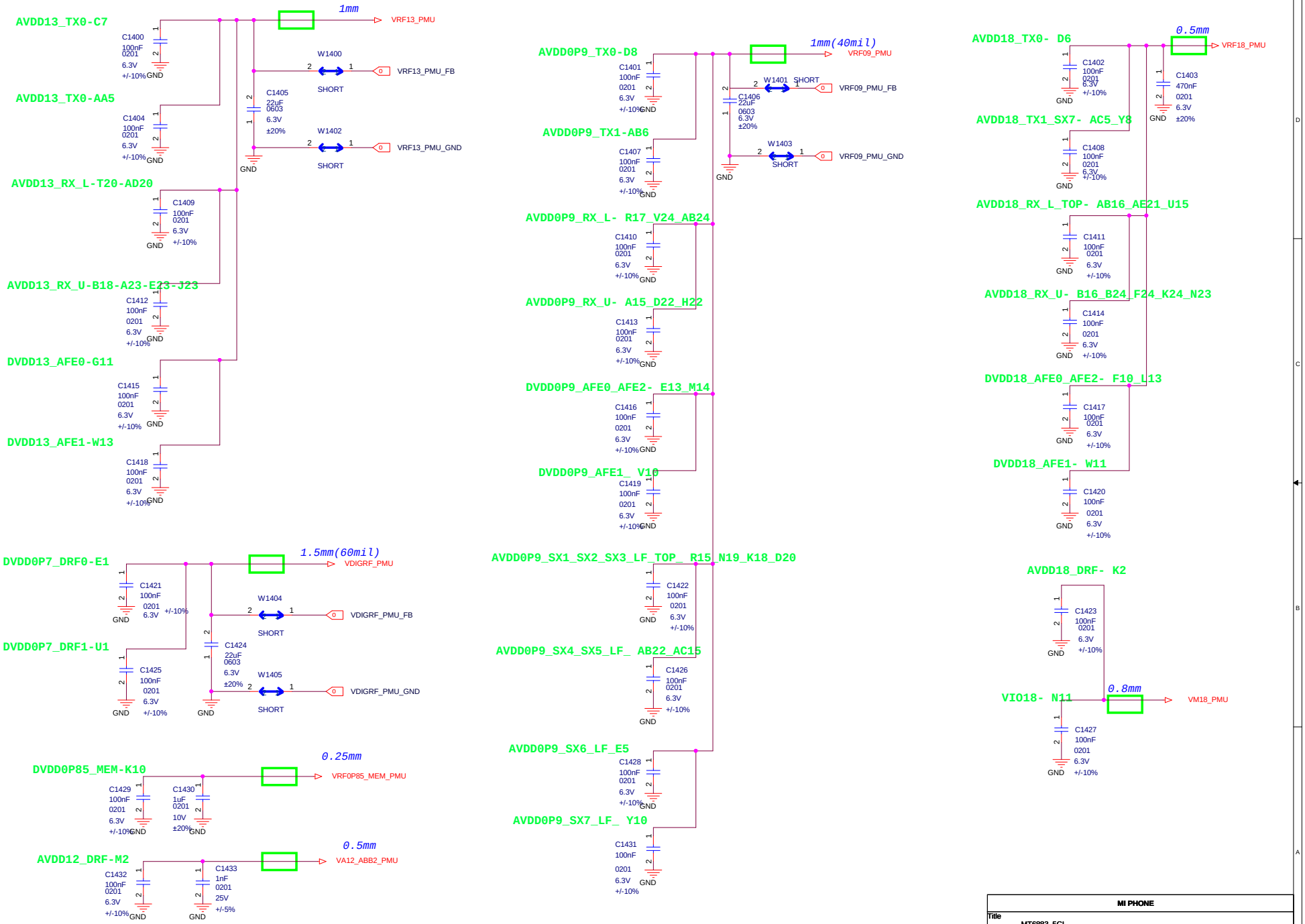


| MI PHONE | | |
|---|---|---|
| Title: MT6883_5GL | | |
| Size: A3 | Document Number: WTR PWR | Rev: P0 |
| Date: Tuesday, March 24, 2020 | Sheet 16 of 73 | |

| MI PHONE | | | |
|---|---|---|---|
| Title | MT6873_5GA | | |
| Size A3 | Document Number Reserved(for 5G-sub 6G) | | Rev P0 |
| Date: Tuesday, January 14, 2020 | | Sheet 20 of 73 | |

| MI PHONE | | |
|---|---|---|
| Title | MT6873_5GA | |
| Size A3 | Document Number Reserved(for MM Wave) | Rev P0 |
| Date: Tuesday, January 14, 2020 | Sheet 21 of 73 | |

| MI PHONE | | | |
|---|---|---|---|
| Title | MT6873_5GA | | |
| Size A3 | Document Number Reserved(for 5G-WTR I) | | Rev P0 |
| Date: Tuesday, January 14, 2020 | | Sheet 22 of 73 | |

| MI PHONE | | |
|---|---|---|
| Title | MT6873_5GA | |
| Size A3 | Document Number Reserved(for 5G-WTR P) | Rev P0 |
| Date: Tuesday, January 14, 2020 | Sheet 23 of 73 | |

| MI PHONE | | |
|---|---|---|
| Title MT6873_5GA | | |
| Size A3 | Document Number Reserved(for 5G-OTHERS) | Rev P0 |
| Date: Tuesday, January 14, 2020 | Sheet 24 of 73 | |

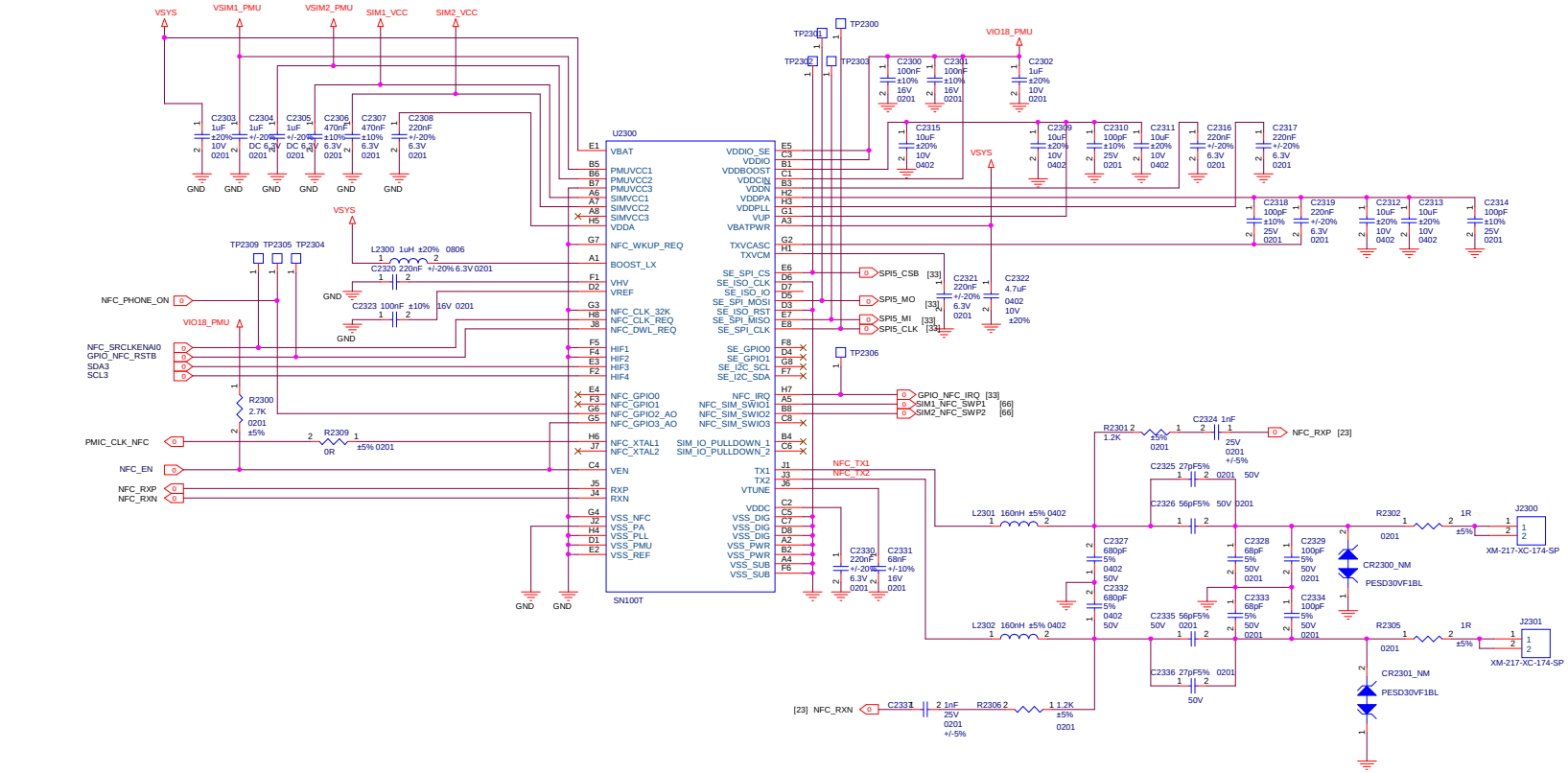


**Note: 52-1**

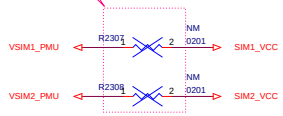


| | | |
|---|---|---|
| MI PHONE | | |
| Title: MT6873_5GA | | |
| Size: C | Document Number: NFC | Rev |
| Date: Tuesday, March 24, 2020 | Sheet 25 of 73 | |

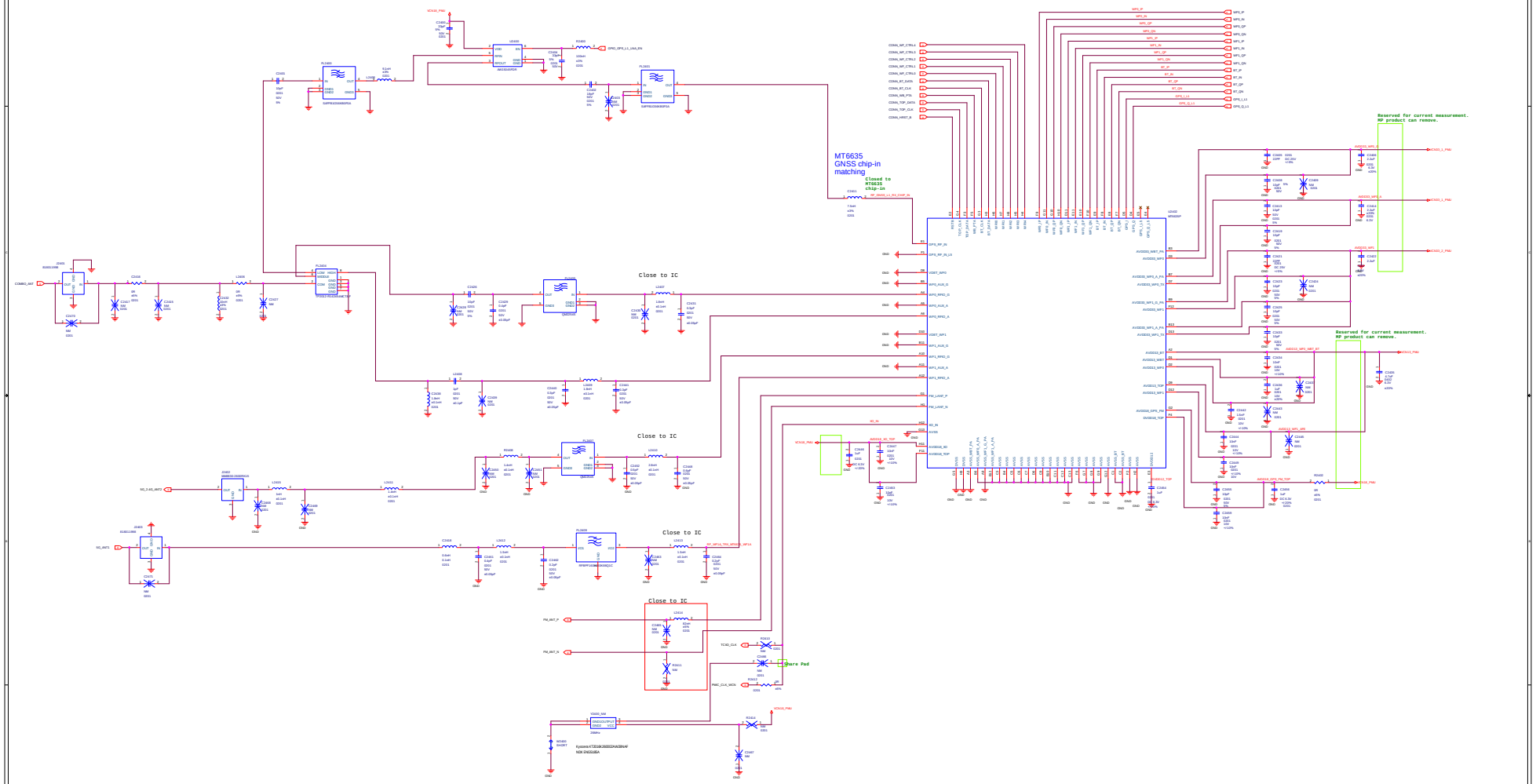
MT6635
GNSS chip-in
matching
Closed to
MT6635
Chip-in
Close to IC
Close to IC
Close to IC
Close to IC
Share Pad
Reserved for current measurement.
MP product can remove.
Reserved for current measurement.
MP product can remove.
COMBO_ANT
WL_2.4G_ANT2
WL_ANT1
VCN18_PMU
VCN18_PMU
VCN18_PMU
VCN18_PMU
GPIO_GPS_L1_LNA_EN
FM_ANT_P
FM_ANT_N
TCXO_CLK
FMAC_CLK_WCN
RF_MPLA_TX5_MPA5_MPL4
RF_GNSS_L1_TX_CHIP_IN
Kyocera KT3216K26002DAW28NAF
NDK ENG01AEA
MP PROMP
MT6873_SOA
Generated Number
MP1_Interface
Sunday, 2017 2 26

| MI PHONE | | |
|---|---|---|
| Title MT6873_5GA | | |
| Size A3 | Document Number Reserved(for WIFI FEM) | Rev P0 |
| Date: Tuesday, January 14, 2020 | Sheet 27 of 73 | |

| MI PHONE | | |
|---|---|---|
| Title MT6873_5GA | | |
| Size A3 | Document Number Reserved(WIFIdecoupling) | Rev P0 |
| Date: Tuesday, January 14, 2020 | Sheet 28 of 73 | |

| MI PHONE | | |
|---|---|---|
| Title: MT6873_5GA | | |
| Size: A3 | Document Number: Reserved(for 11ad/11ax) | Rev: P0 |
| Date: Tuesday, January 14, 2020 | Sheet 29 of 73 | |

| MI PHONE | | |
|---|---|---|
| Title: MT6873_5GA | | |
| Size: A3 | Document Number: Reserved(for 11ad/11ax) | Rev: P0 |
| Date: Tuesday, January 14, 2020 | Sheet 30 of 73 | |

| MI PHONE | | |
|---|---|---|
| Title: MT6873_5GA | | |
| Size: A3 | Document Number: Reserved(for Digital FM) | Rev: P0 |
| Date: Tuesday, January 14, 2020 | Sheet 31 of 73 | |

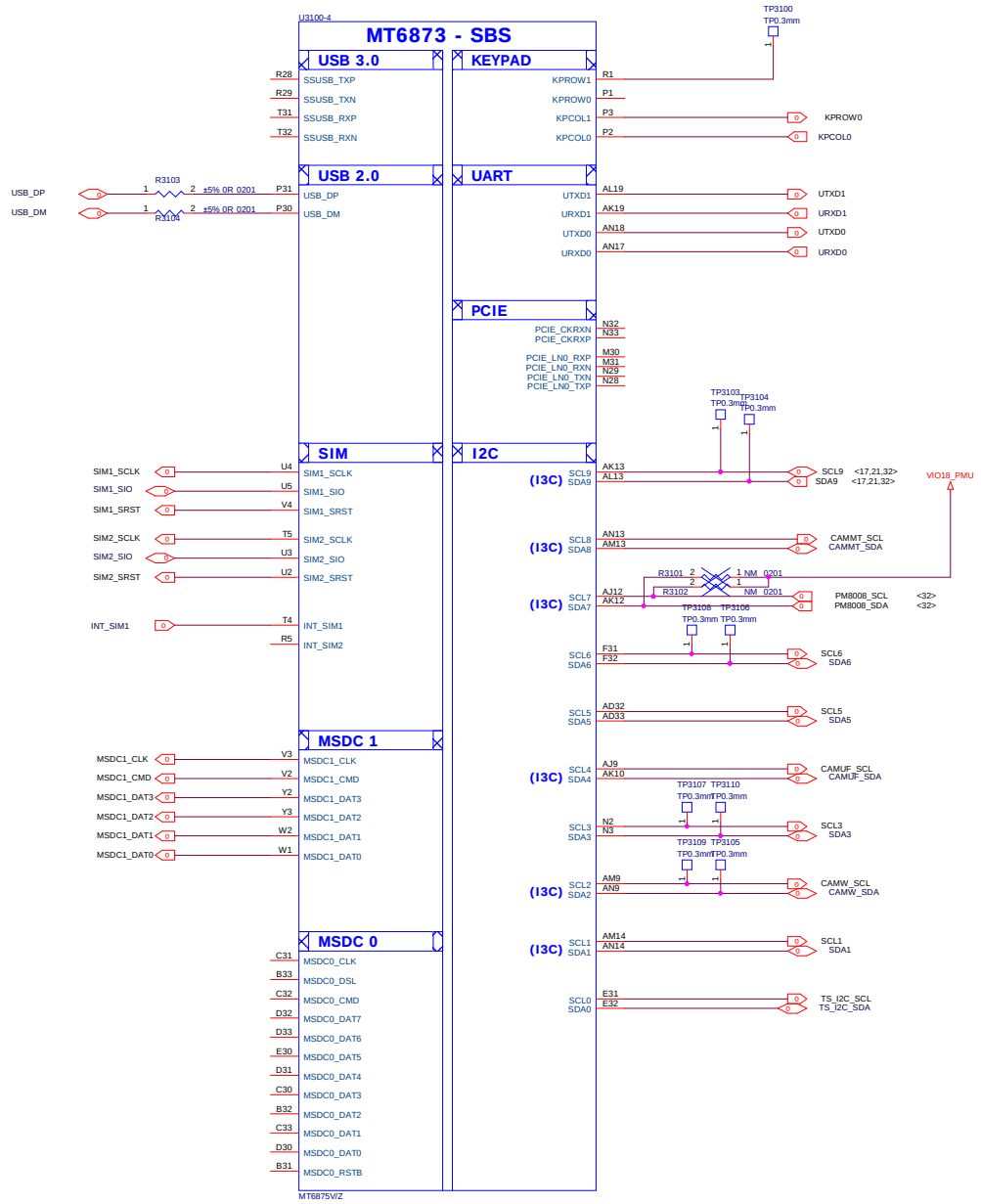


| | | | |
|---|---|---|---|
| MI PHONE | | | |
| Title | MT6873_5GA | | |
| Size C | Document Number MT6873_GPIO_1 | | Rev |
| Date: Wednesday, April 08, 2020 | Sheet 31 | of 73 | |

| MI PHONE | | |
|---|---|---|
| Title: MT6873_5GA | | |
| Size: A3 | Document Number: Reserved(for Analog FM) | Rev: P0 |
| Date: Tuesday, January 14, 2020 | Sheet 32 of 73 | |

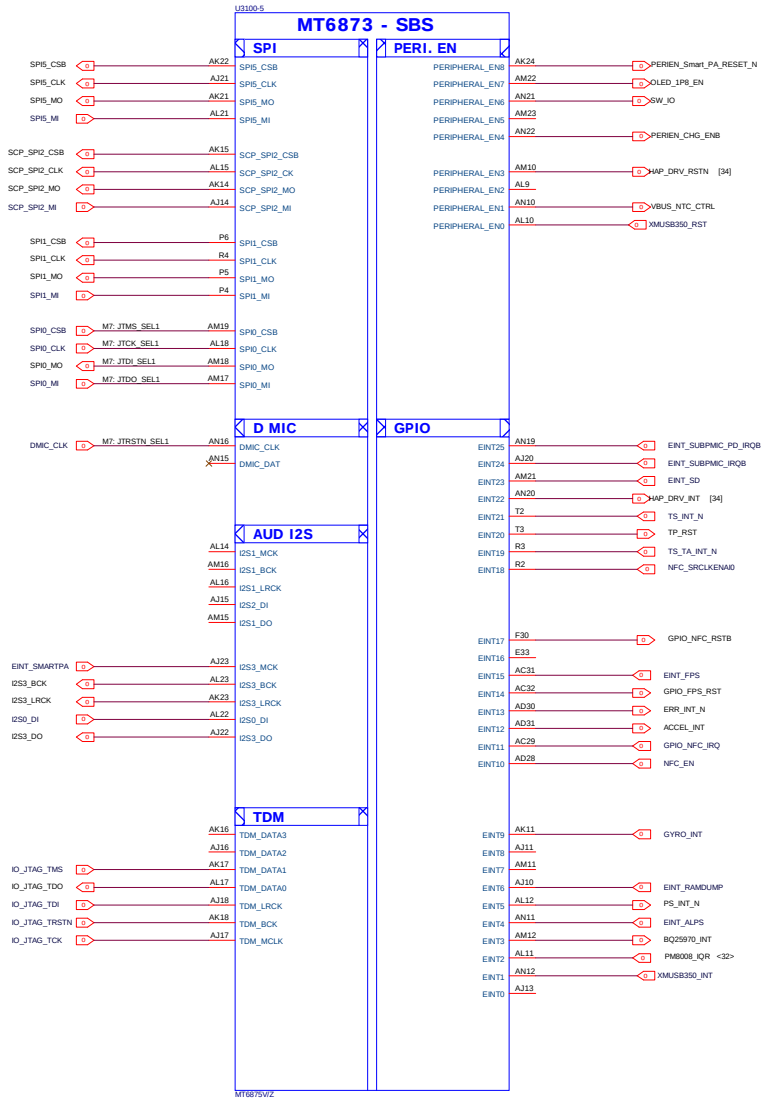


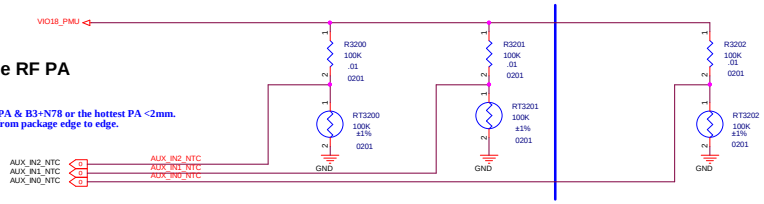


## Thermistor to sense RF PA temperature

1. RT3200 & RT3201 must close to B7 PA & B3+N78 or the hottest PA <2mm.
2. The distance is the shortest distance from package edge to edge.

## Thermistor to sense AP temperature

1. RT3202 must keep a distance about 6~8 mm away from AP and far from other heat sources 10 mm at least.
2. The distance is the shortest distance from package edge to edge.

| | | | |
|---|---|---|---|
| MI PHONE | | | |
| Title | MT6873_5GA | | |
| Size | Document Number | | Rev |
| A2 | MT6873_GPIO_2 | | |
| Date: Wednesday, April 08, 2020 | Sheet 34 | of 73 | |

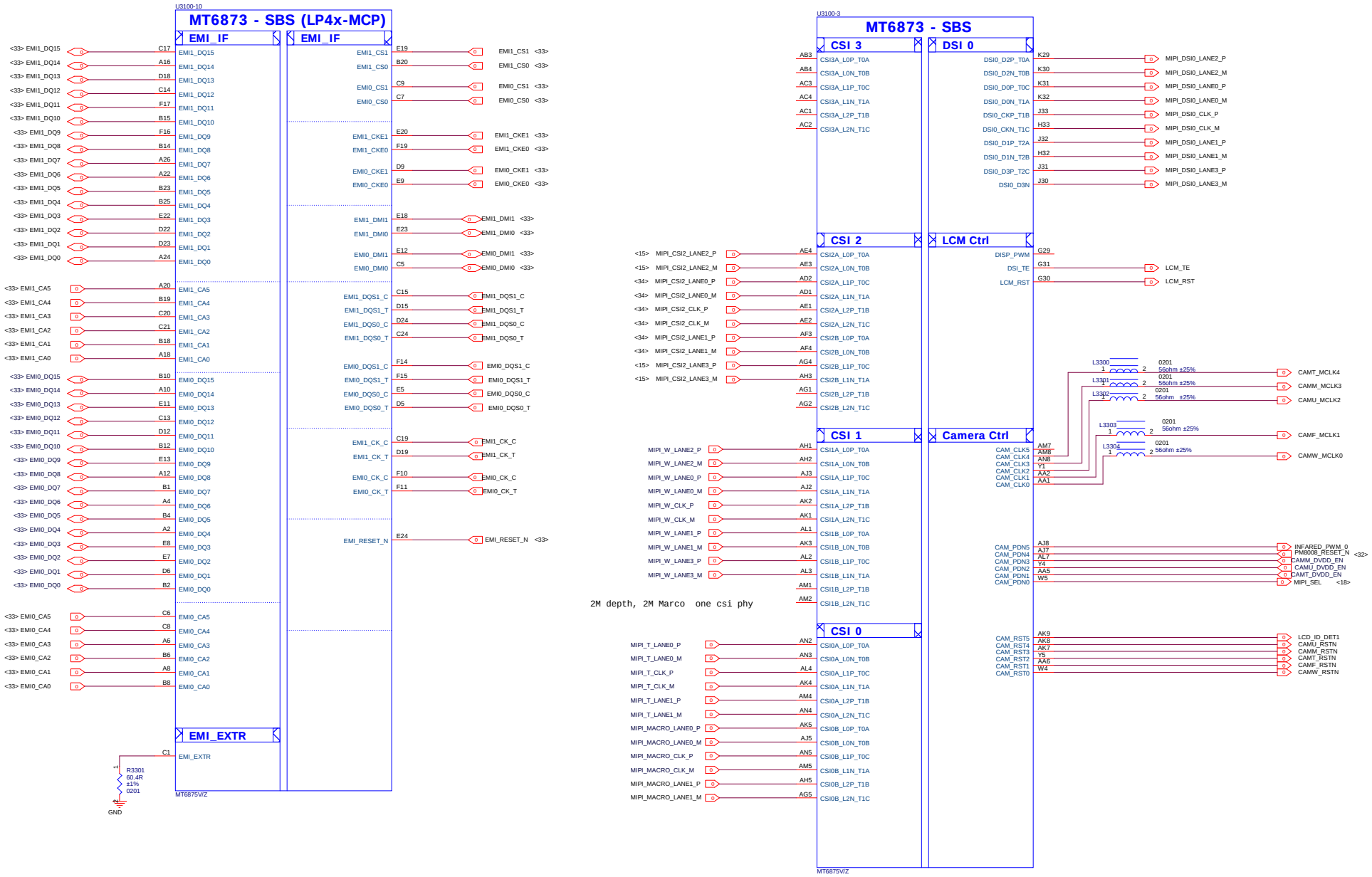


| MI PHONE | | |
|---|---|---|
| Title | MT6873_5GA | |
| Size C | Document Number MT6883_CAM_LCM | Rev |
| Date: Wednesday, April 08, 2020 | Sheet 35 of 73 | |

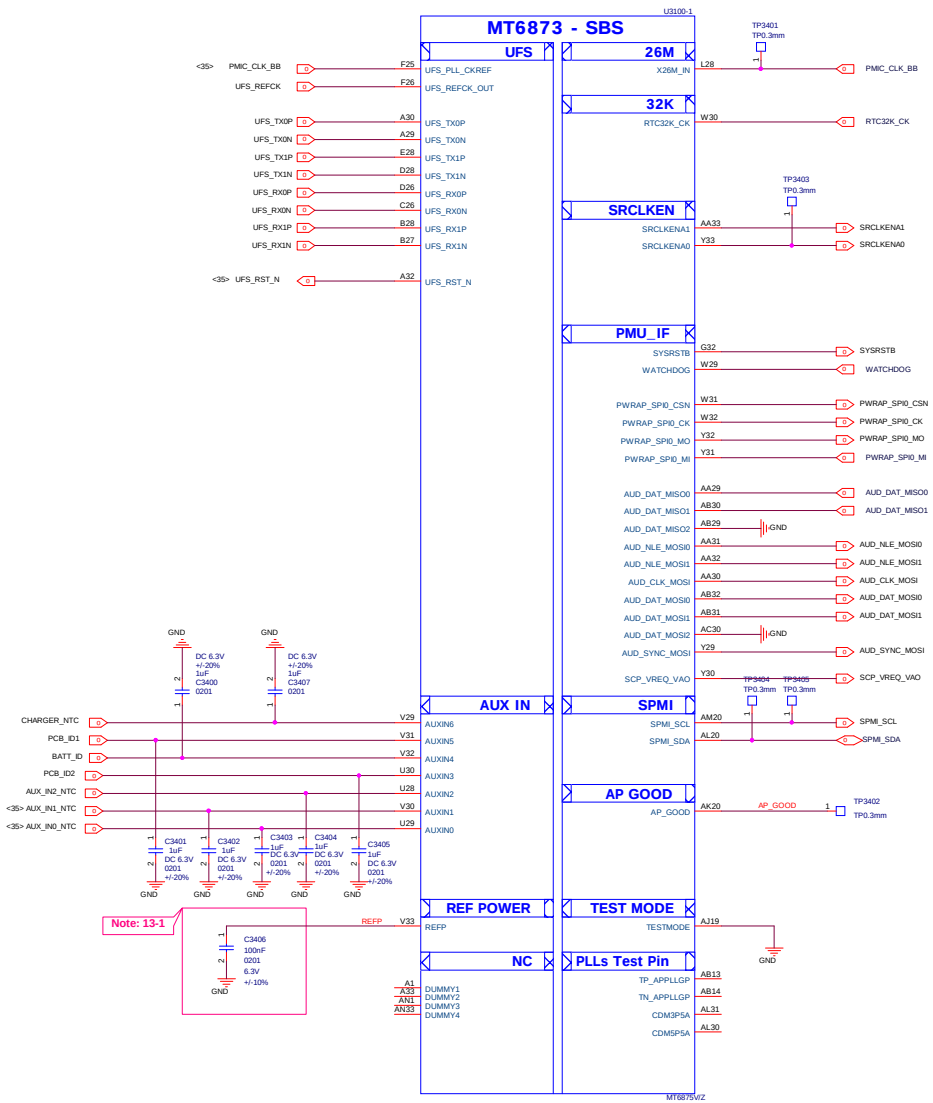


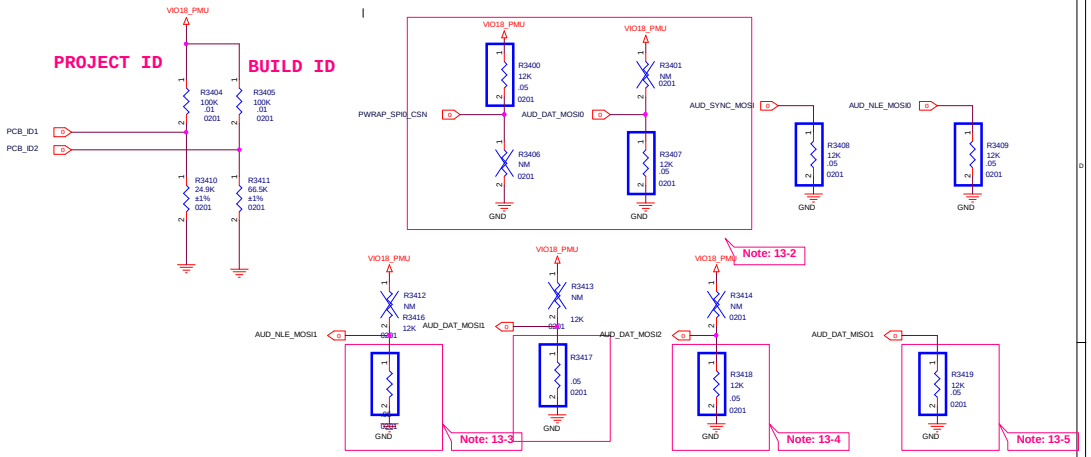


## Schematic design notice:

Note 13-1: The load cap. have to be placed as close to REFP ball as possible.

Note 13-2: "PWRAP_SPI0_CSN" and "AUD_DAT_MOS0"I pin features in trapping pin to enable JTAG.

| PWRAP_SPI0_CSN | AUD_DAT_MOSI0 | AP JTAG | IO JTAG |
|---|---|---|---|
| H (Default) | L (Default) | N/A | N/A |
| H | H (by external PU) | SPI0_CSB, SPI0_CLK, SPI0_MO, SPI0_MI, DMIC_CLK | N/A |
| L (by external PD) | L | SPI0_CSB, SPI0_CLK, SPI0_MO, SPI0_MI, DMIC_CLK | TDM_LRCK/TDM_BCK/TDM_MCK/ TDM_DATA0/TDM_DATA1 |
| L (by external PD) | H (by external PU) | MSDC1_CLK, MSDC1_CMD, MSDC1_DAT0, MSDC1_DAT1, MSDC1_DAT2 | N/A |

Note 13-3: "AUD_NLE_MOSI1" features in trapping pin to enable JTAG over USB 2.0 port.

| AUD_NLE_MOSI1 | USB JTAG |
|---|---|
| L (Default) | USB 2.0 |
| H (by external PU) | DP/DM output JTAG |

Note 13-4: "AUD_NLE_MOSI0" is trapping pin to select UFS booting only or eMMC booting only.

| AUD_NLE_MOSI0 | Storage Booting |
|---|---|
| L (Default) | UFS only |
| H (by external PU) | eMMC only |

Note 13-5: "AUD_DAT_MISO1" is trapping pin to select VEMC Voltage.

| AUD_DAT_MISO1 | VEMC Voltage |
|---|---|
| L (Default) | VEMC=3.0V UFS2.1 |
| H (by external PU) | VEMC=2.5V UFS3.0 |

| | | | |
|---|---|---|---|
| MI PHONE | | | |
| Title: MT6873_5GA | | | |
| Size: A2 | Document Number: MT6883 INTF | | Rev |
| Date: Wednesday, April 08, 2020 | Sheet 36 | of 73 | |

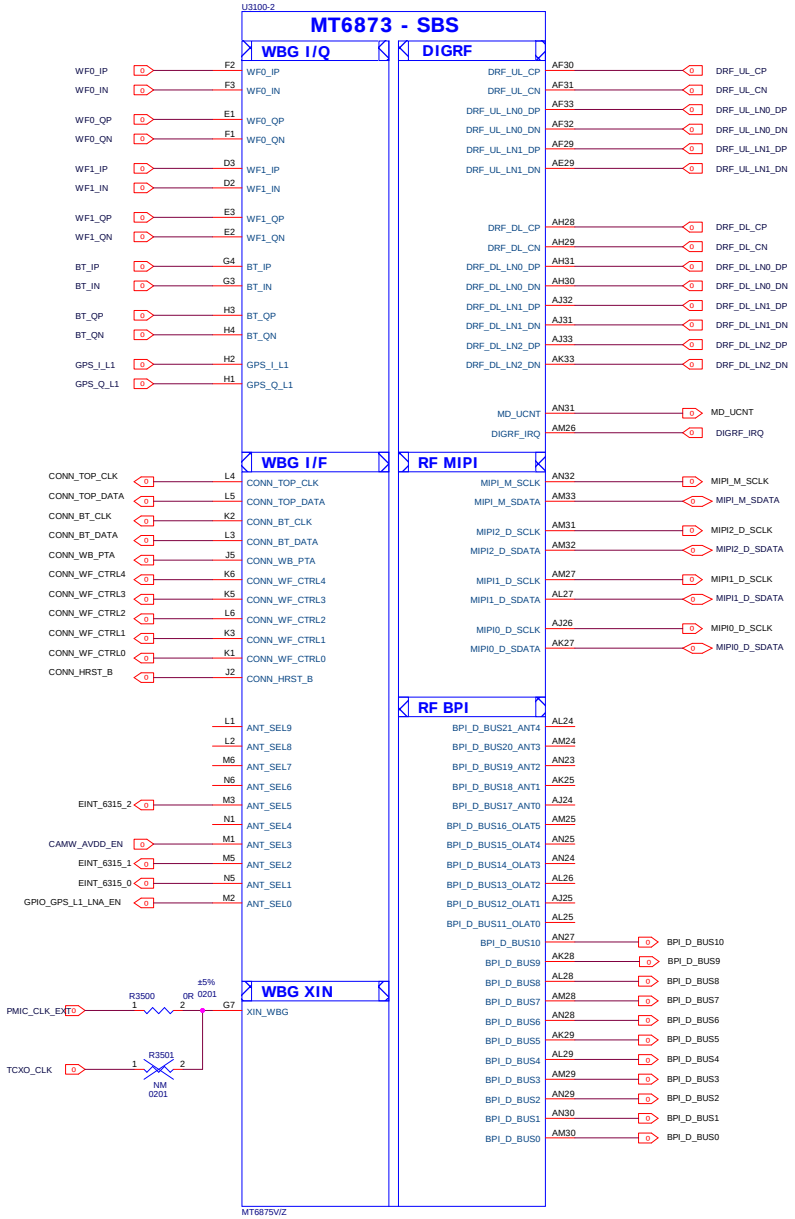


| | | |
|---|---|---|
| MI PHONE | | |
| Title: MT6873_5GA | | |
| Size: C | Document Number: MT6883_RF_INTF | Rev |
| Date: Wednesday, April 08, 2020 | Sheet 37 of 73 | |

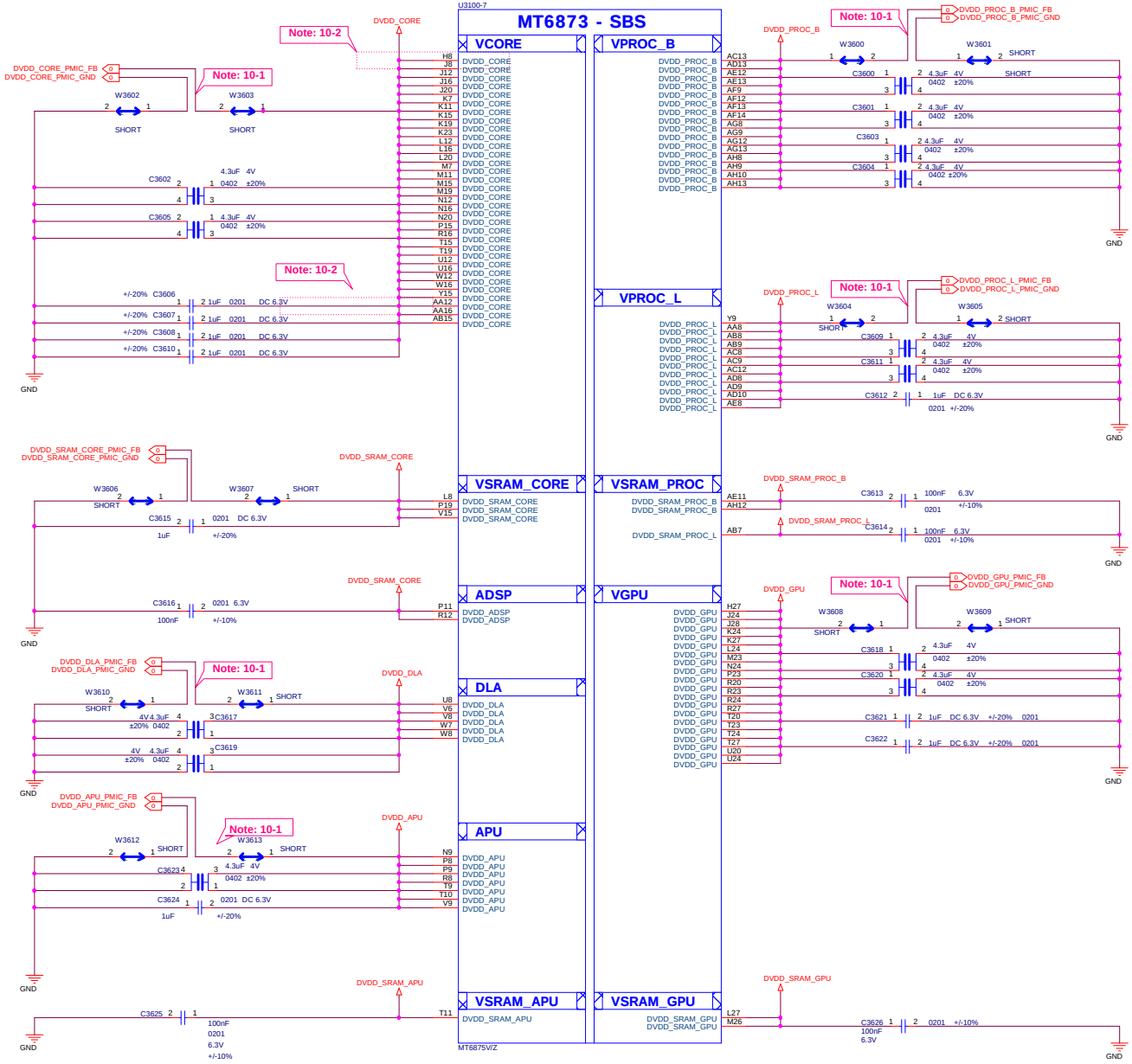


## Schematic design notice of "10_BB_POWER_PDN" page.

Note 10-1: Differential pair of PMIC remote sense must be close to BB's ball.

Remote sense trace with GND shielding to PMIC (Differential)

| | |
|---|---|
| MI PHONE | |
| Title | MT6873_5GA |
| Size C | Document Number MT6883_PWR1 |
| Rev | |
| Date: Wednesday, April 08, 2020 | Sheet 38 of 73 |

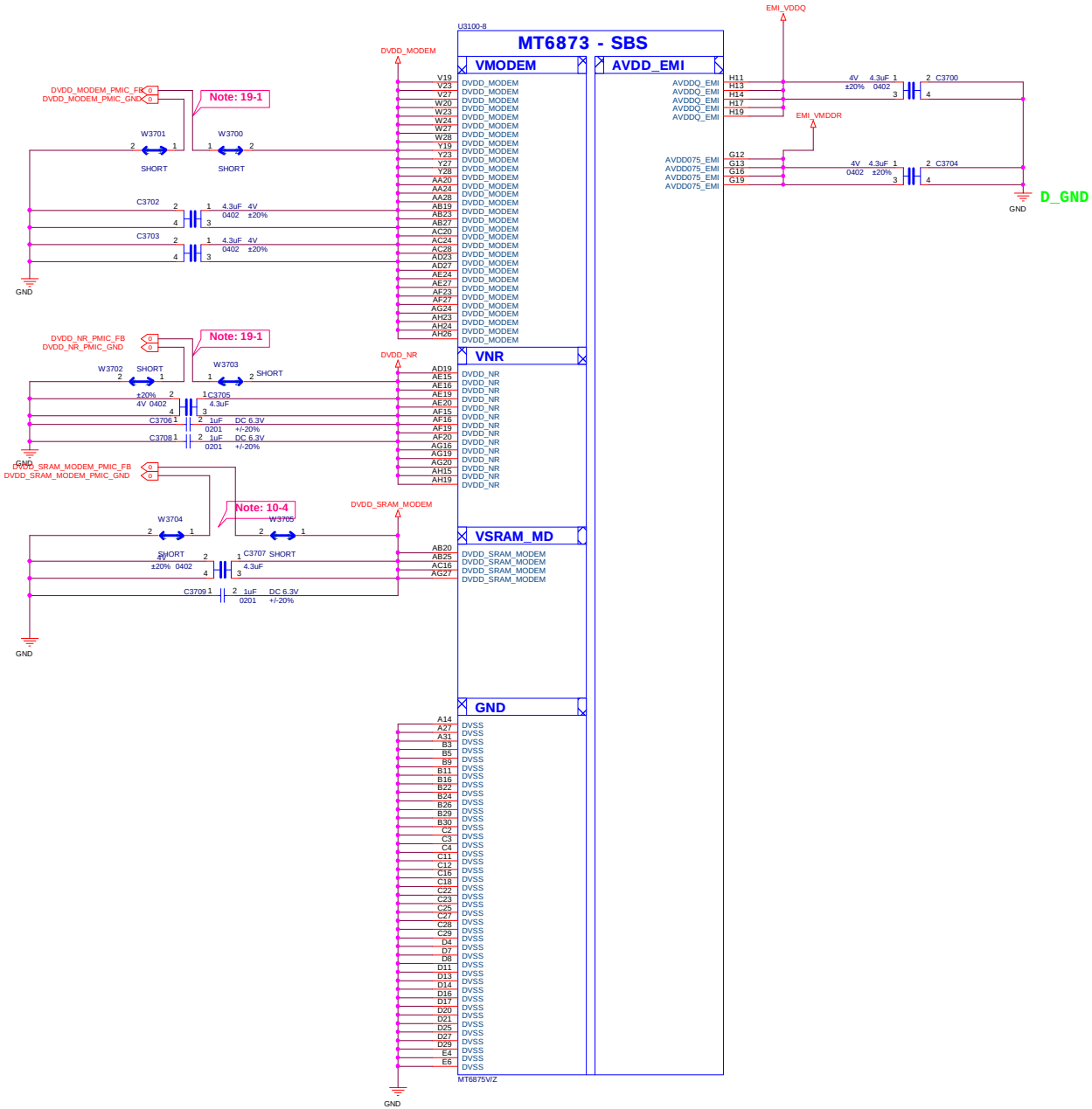


## Schematic design notice of "11_BB_POWER_PDN" page.

Note 11-1: Differential pair of PMIC remote sense must be close to BB's ball.

Remote sense trace with GND shielding to PMIC (Differential)

| | | |
|---|---|---|
| MI PHONE | | |
| Title: MT6873_5GA | | |
| Size: C | Document Number: MT6883_PWR2 | Rev |
| Date: Wednesday, April 08, 2020 | Sheet 39 of 73 | |

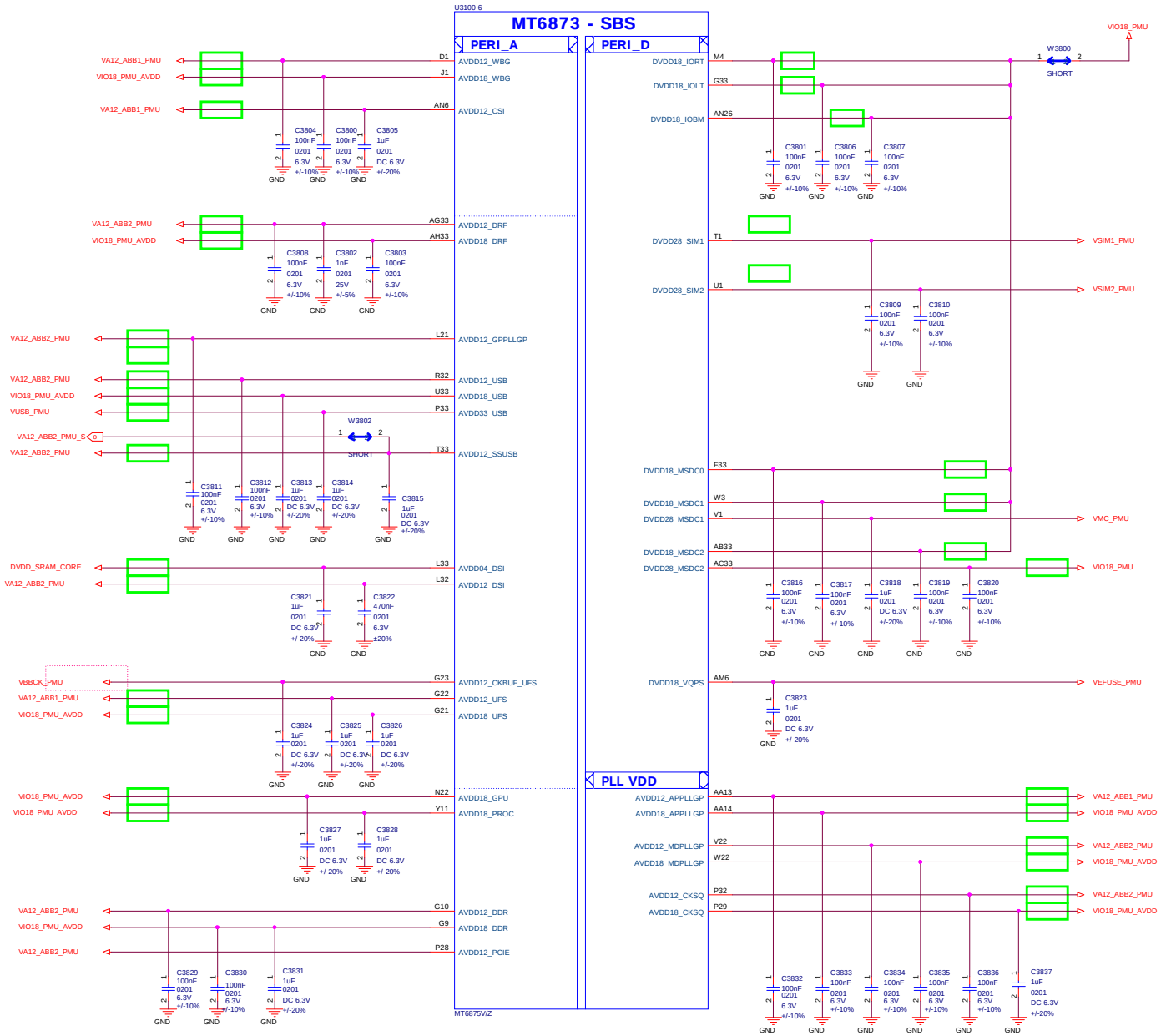


| MI PHONE | | |
|---|---|---|
| Title | MT6873_5GA | |
| Size C | Document Number MT6883_PWR3 | Rev |
| Date: Wednesday, April 08, 2020 | Sheet 40 of 73 | |

1. "Typical Cap" defined in design notice is the minimum cap. to LDO Cout.
2. NC cap can move to application, if (PCB L<20nH, PCB R<0.2mohm)
=> value and placement of Cap, please refer design notice

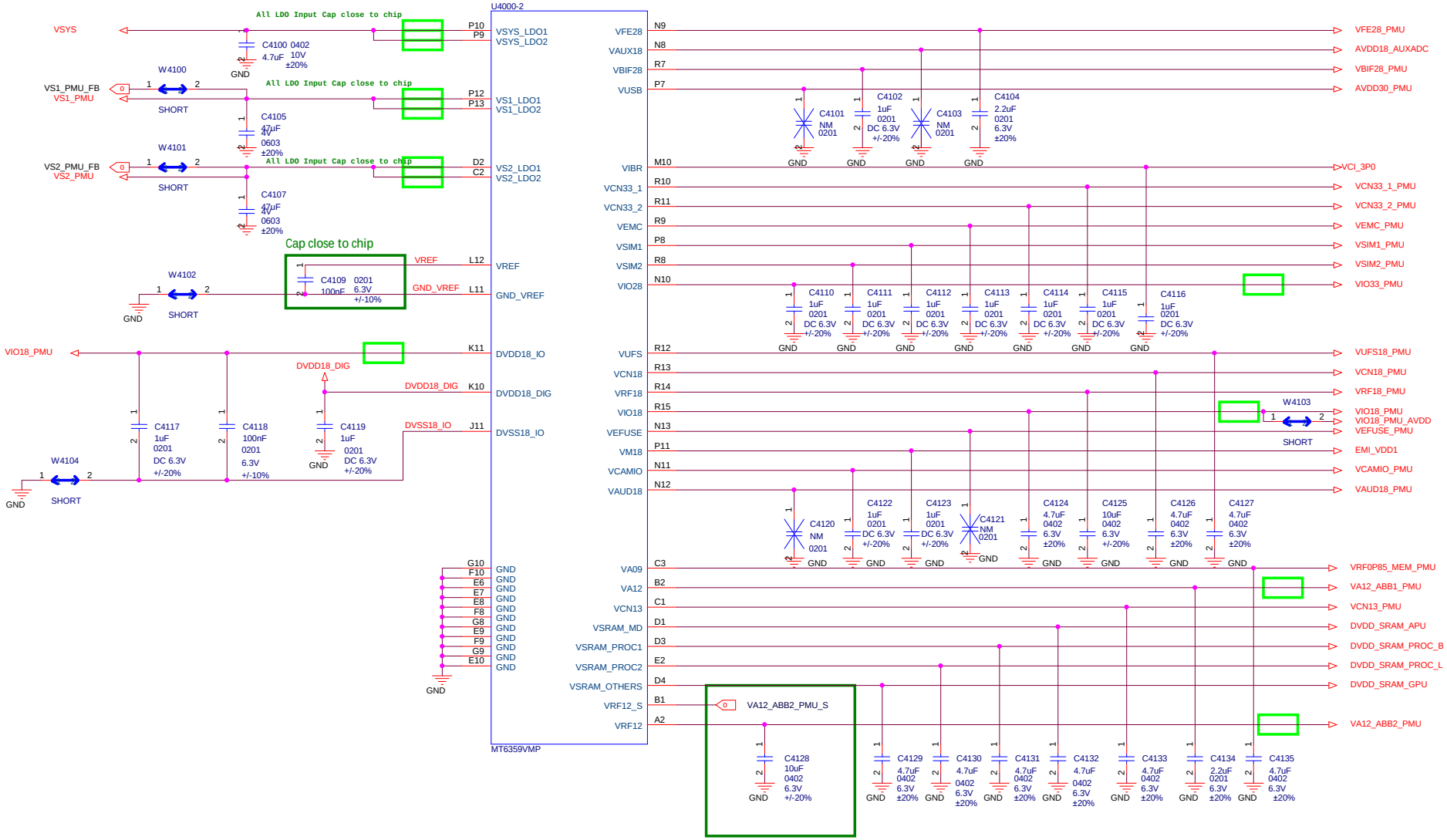


| MI PHONE | | |
|---|---|---|
| Title | MT6873_5GA | |
| Size A3 | Document Number MT6359_LDO | Rev |
| Date: Tuesday, March 31, 2020 | Sheet 41 of 73 | |

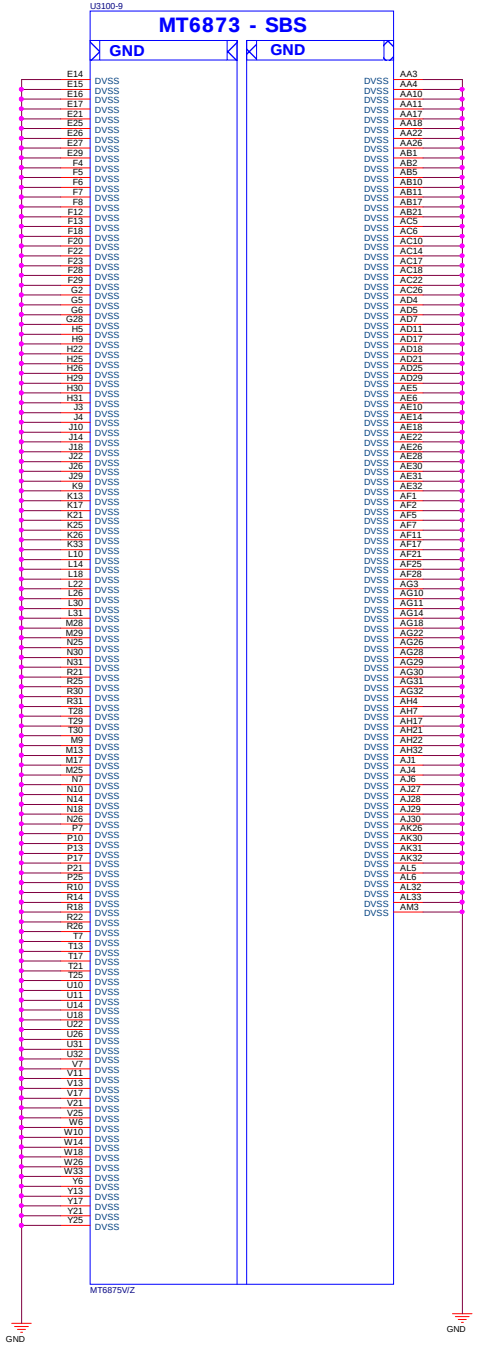


| | | |
|---|---|---|
| MI PHONE | | |
| Title: MT6873_5GA | | |
| Size: C | Document Number: MT6883_GND | Rev |
| Date: Wednesday, April 08, 2020 | Sheet 41 of 73 | |

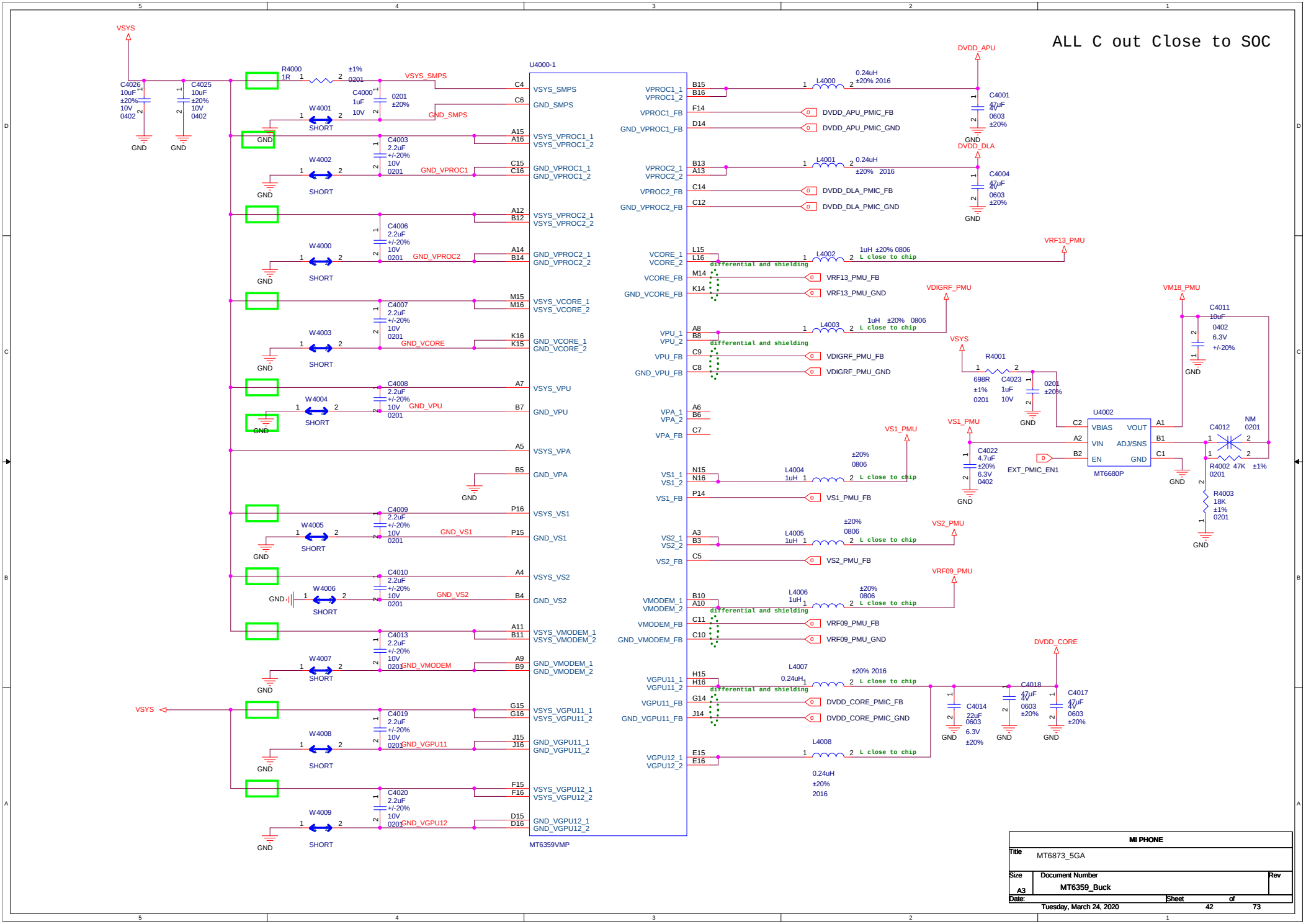
ALL C out Close to SOC
U4000-1
MT6359VMP
VSYS
VSYS_SMPS
GND_SMPS
GND_VPROC1
GND_VPROC2
GND_VCORE
GND_VPU
GND_VPA
GND_VS1
GND_VS2
GND_VMODEM
GND_VGPU11
GND_VGPU12
DVDD_APU
DVDD_DLA
DVDD_CORE
VRF13_PMU
VDIGRF_PMU
VM18_PMU
VS1_PMU
VS2_PMU
VRF09_PMU
DVDD_APU_PMIC_FB
DVDD_APU_PMIC_GND
DVDD_DLA_PMIC_FB
DVDD_DLA_PMIC_GND
VRF13_PMU_FB
VRF13_PMU_GND
VDIGRF_PMU_FB
VDIGRF_PMU_GND
VS1_PMU_FB
VS2_PMU_FB
VRF09_PMU_FB
VRF09_PMU_GND
DVDD_CORE_PMIC_FB
DVDD_CORE_PMIC_GND
EXT_PMIC_EN1
MT6680P
L close to chip
differential and shielding
SHORT
MI PHONE
Title
MT6873_5GA
Size
A3
Document Number
MT6359_Buck
Rev
Date:
Tuesday, March 24, 2020
Sheet
42
of
73

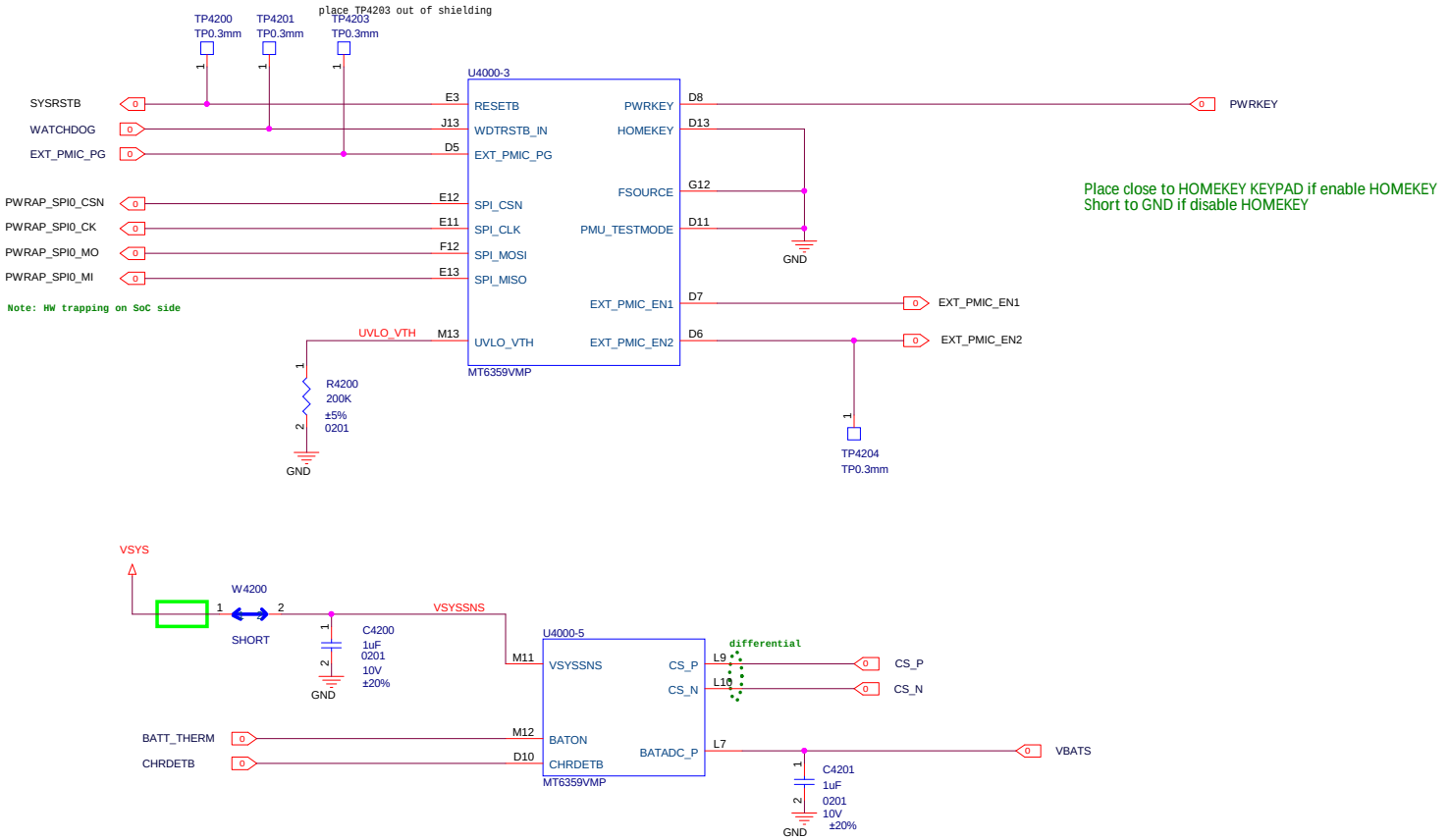


| MI PHONE | | |
|---|---|---|
| Title: MT6873_5GA | | |
| Size: A3 | Document Number: MT6359_General | Rev |
| Date: Tuesday, March 24, 2020 | Sheet 44 of 73 | |

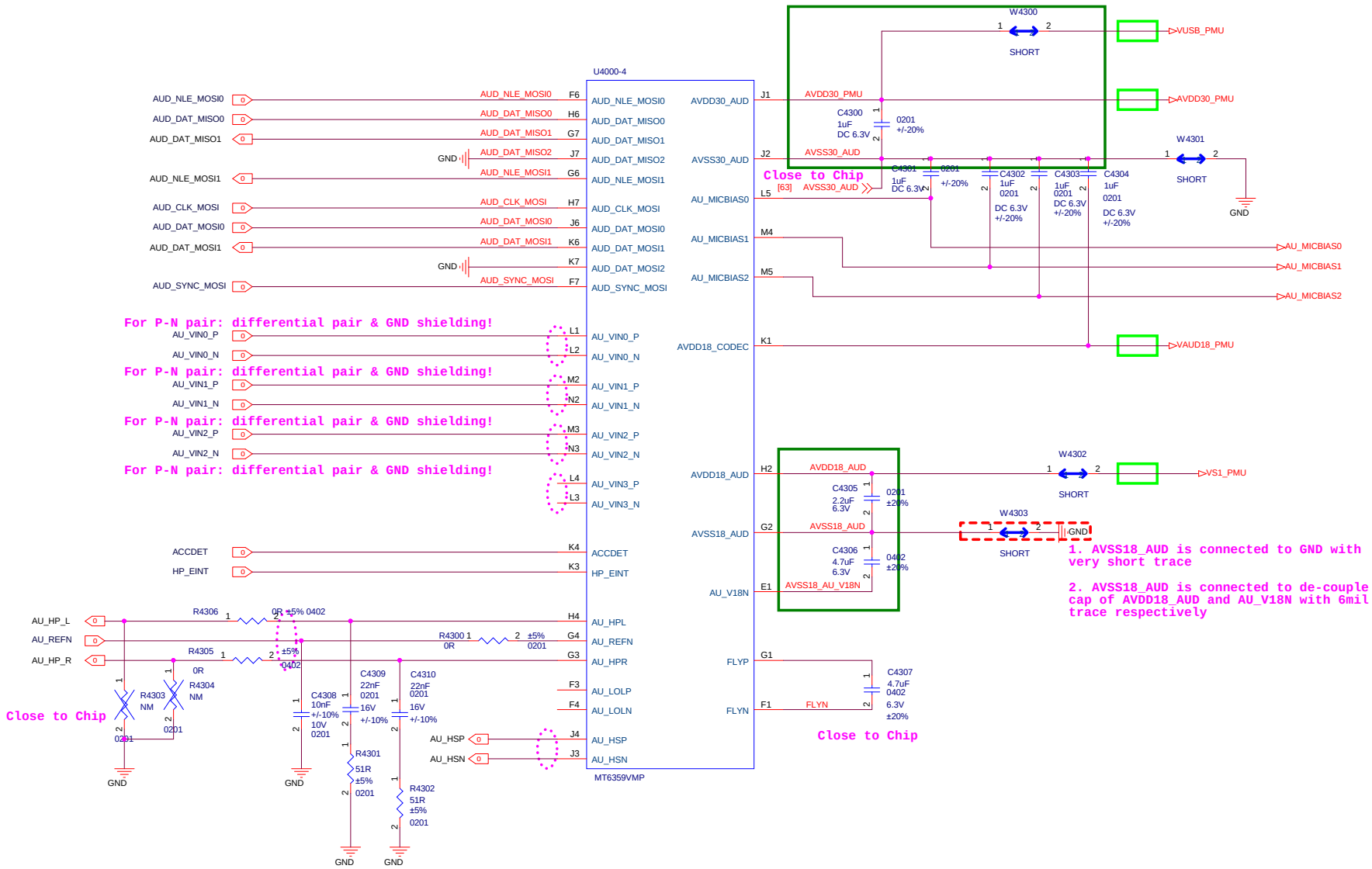


| MI PHONE | | |
|---|---|---|
| Title | MT6873_5GA | |
| Size A3 | Document Number MT6359_AUDIO | Rev |
| Date: Tuesday, March 24, 2020 | Sheet 45 of 73 | |

# DCXO

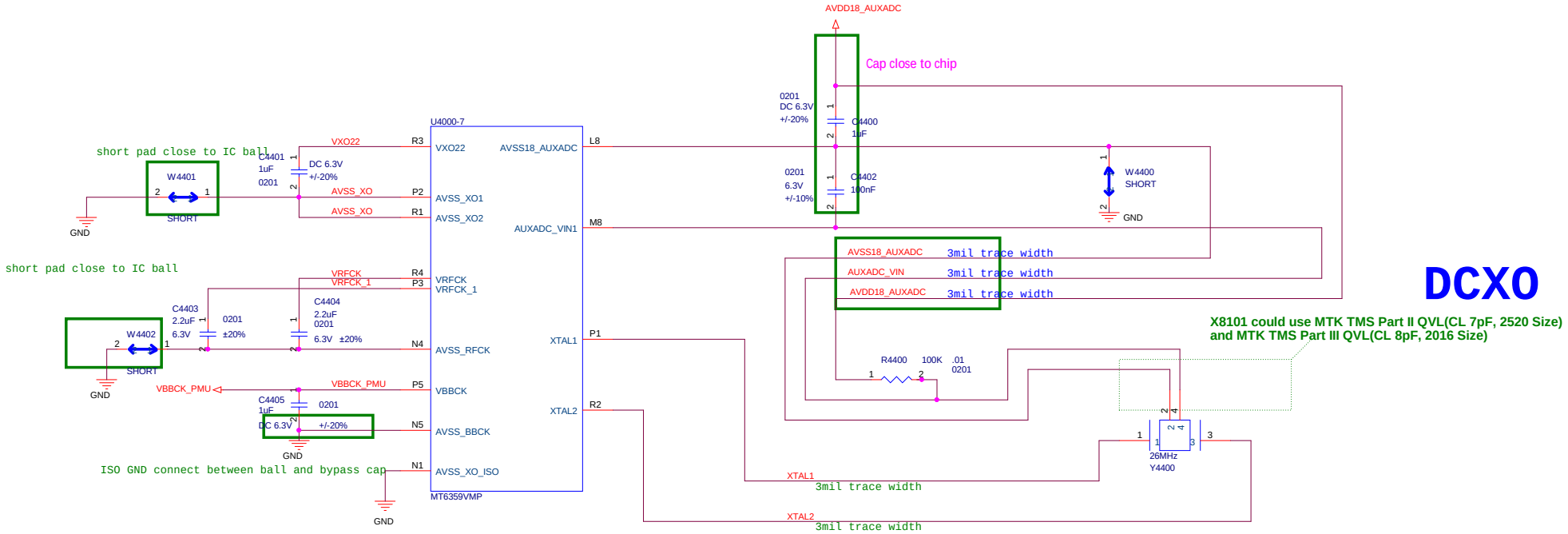


**Route XTAL1/ XTAL2/ AVDD18_AUXADC/ AUXADC_VIN/ AVSS18_AUXADC with 3mils width traces and well GND shielding.**

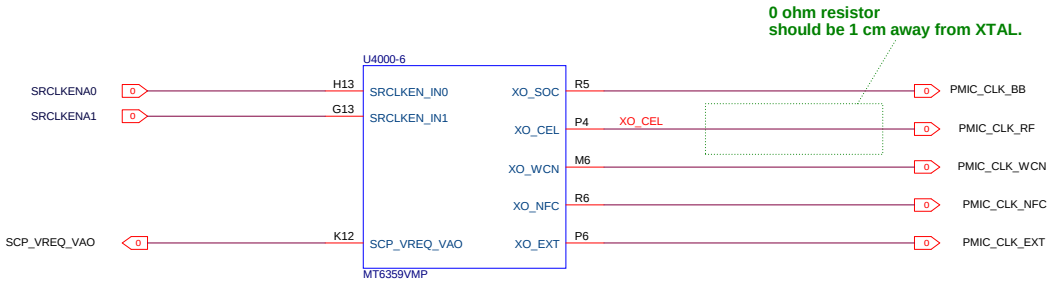


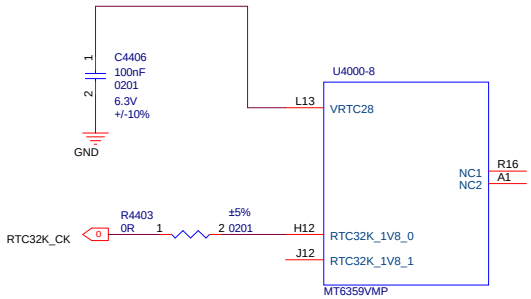


| MI PHONE | | |
|---|---|---|
| Title | MT6873_5GA | |
| Size A3 | Document Number MT6359_Clock | Rev |
| Date: Tuesday, March 24, 2020 | Sheet 46 of 73 | |

ALL C out Close to SOC

# MT6315 4-Phase Buck (CPU/GPU)

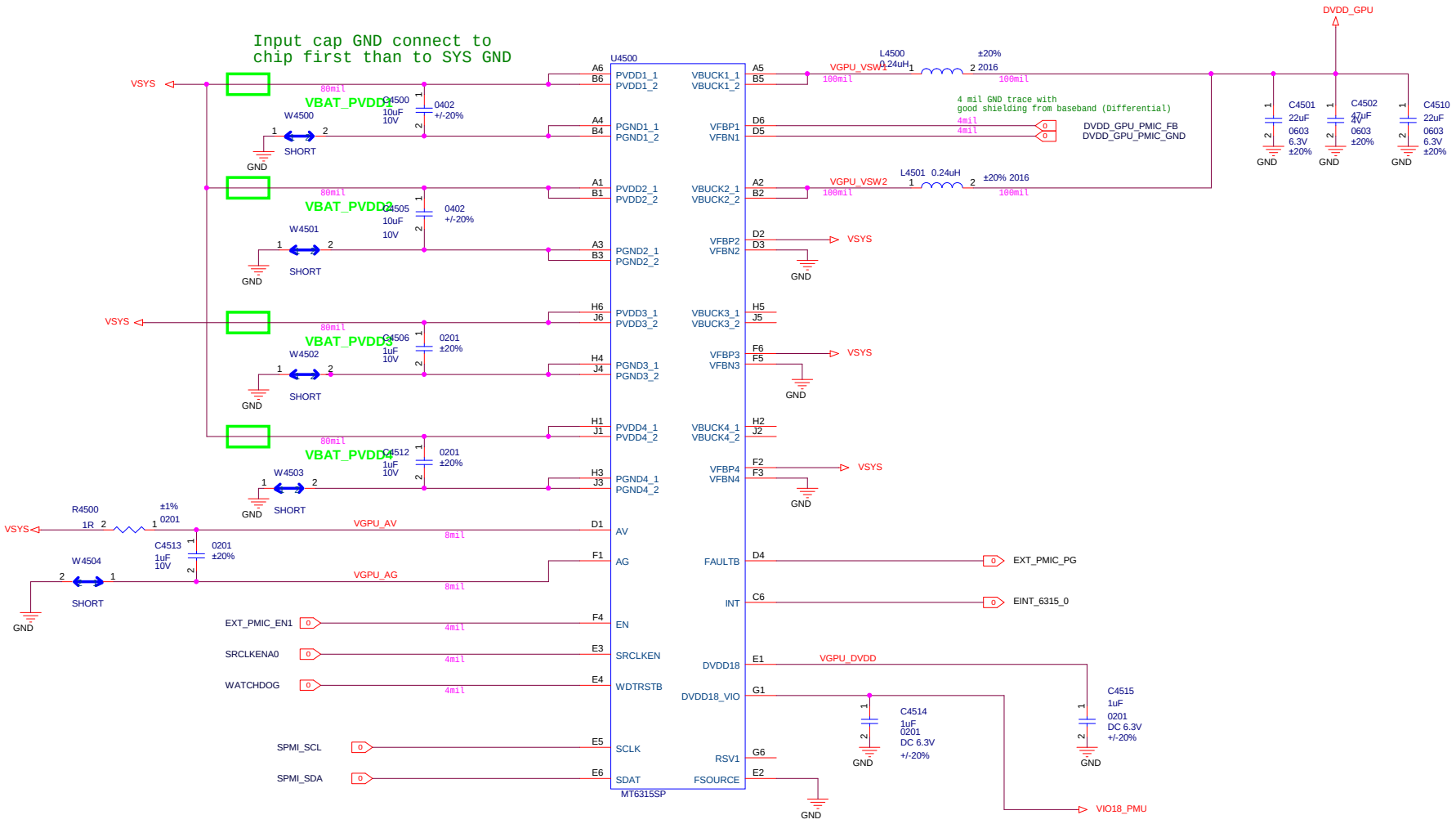


| | |
|---|---|
| MI PHONE | |
| Title | MT6873_5GA |
| Size A3 | Document Number 03_Change_Notice Rev |
| Date: Tuesday, March 24, 2020 | Sheet 47 of 73 |

ALL C out Close to SOC

# MT6315 4-Phase Buck (CPU)

Input cap GND connect to
chip first than to SYS GND

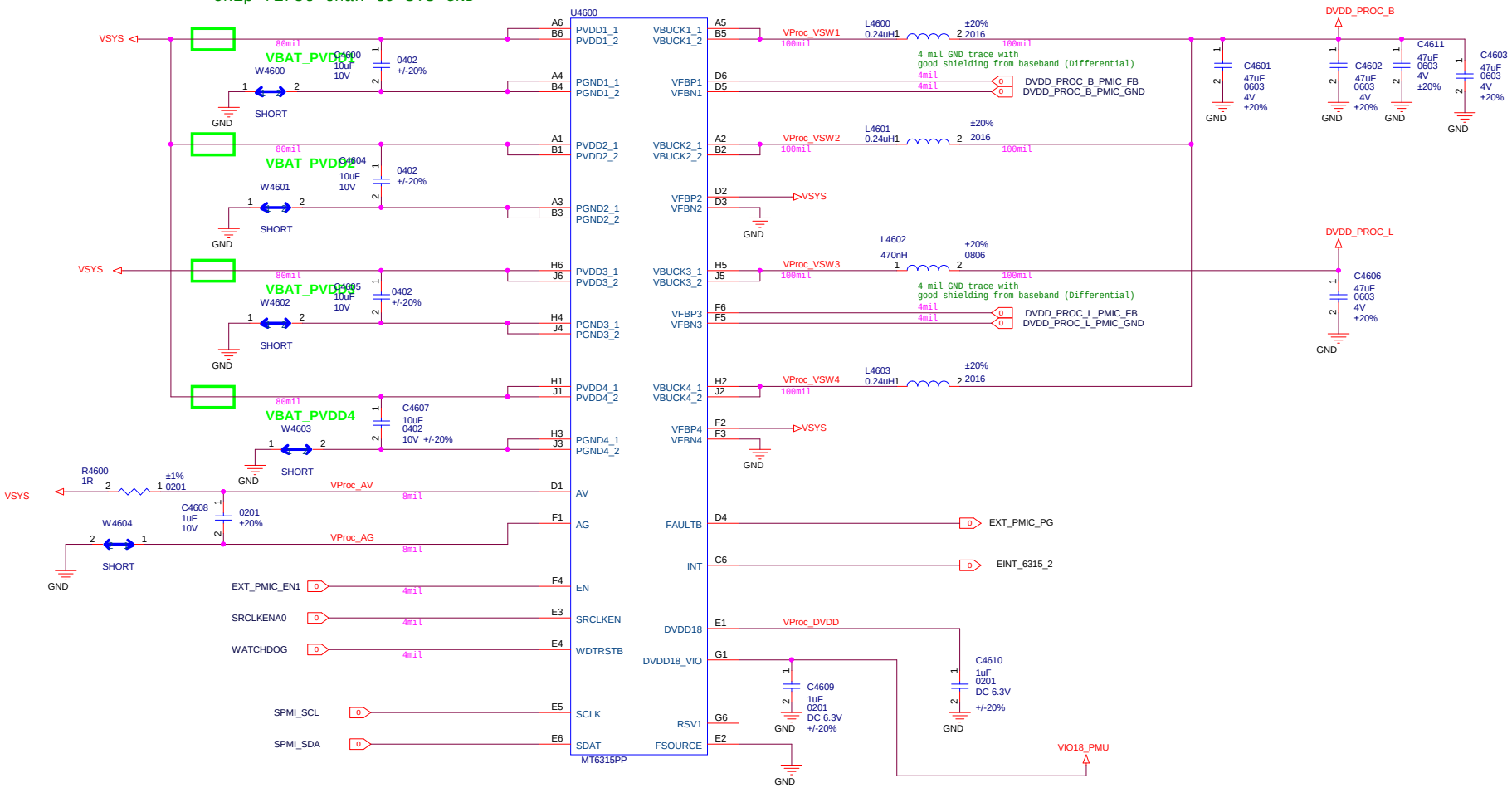


| MI PHONE | | |
|---|---|---|
| Title | MT6873_5GA | |
| Size A3 | Document Number MT6315_VPROC | Rev |
| Date: Tuesday, March 24, 2020 | Sheet 47 of 73 | |

ALL C out Close to SOC

# MT6315 4-Phase Buck (MD)

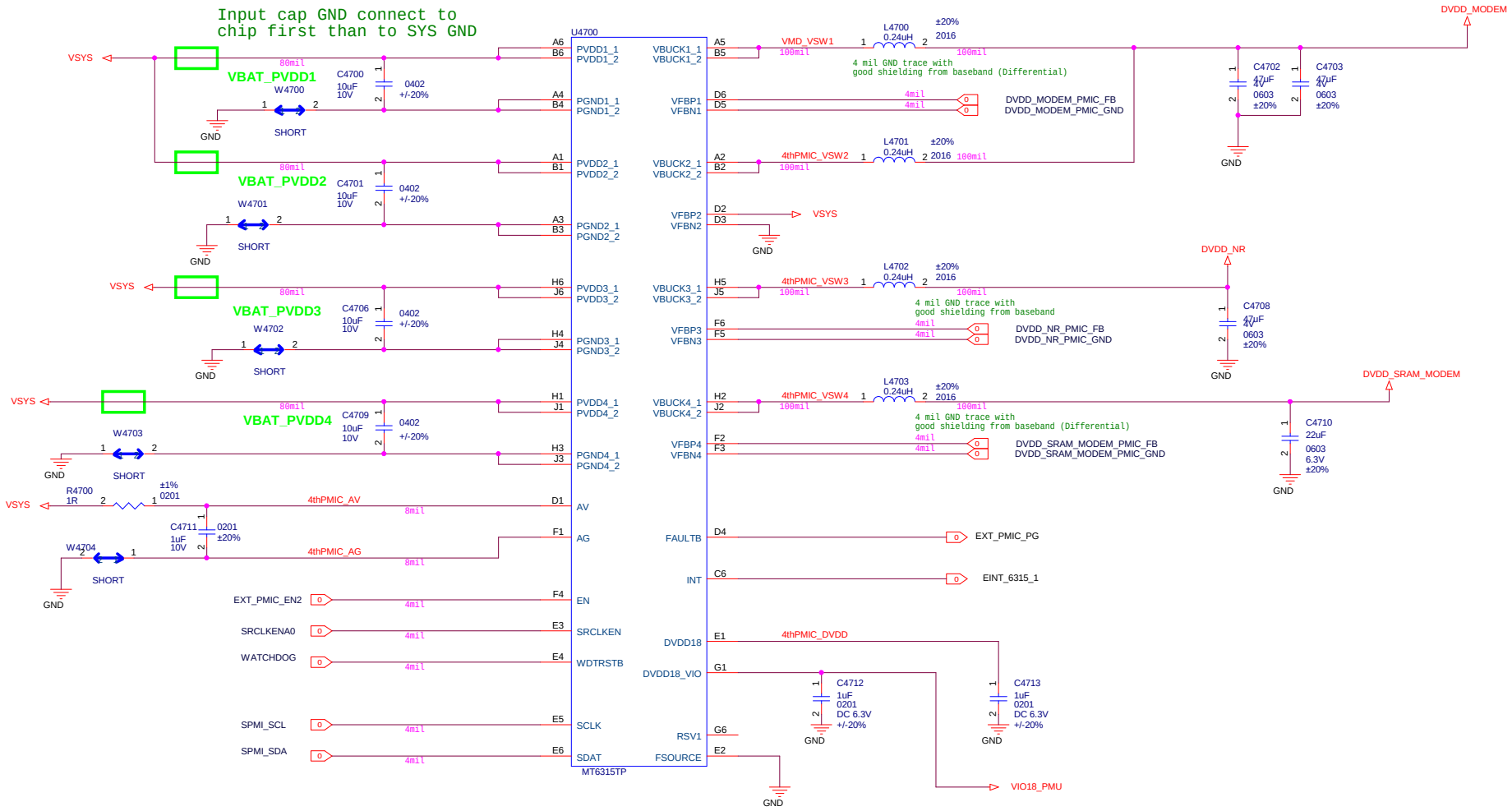


| | | | |
|---|---|---|---|
| MI PHONE | | | |
| Title | MT6873_5GA | | |
| Size A3 | Document Number MT6315_VMD | | Rev |
| Date: Tuesday, March 24, 2020 | Sheet 49 | of 73 | |

ALL C out Close to DDR

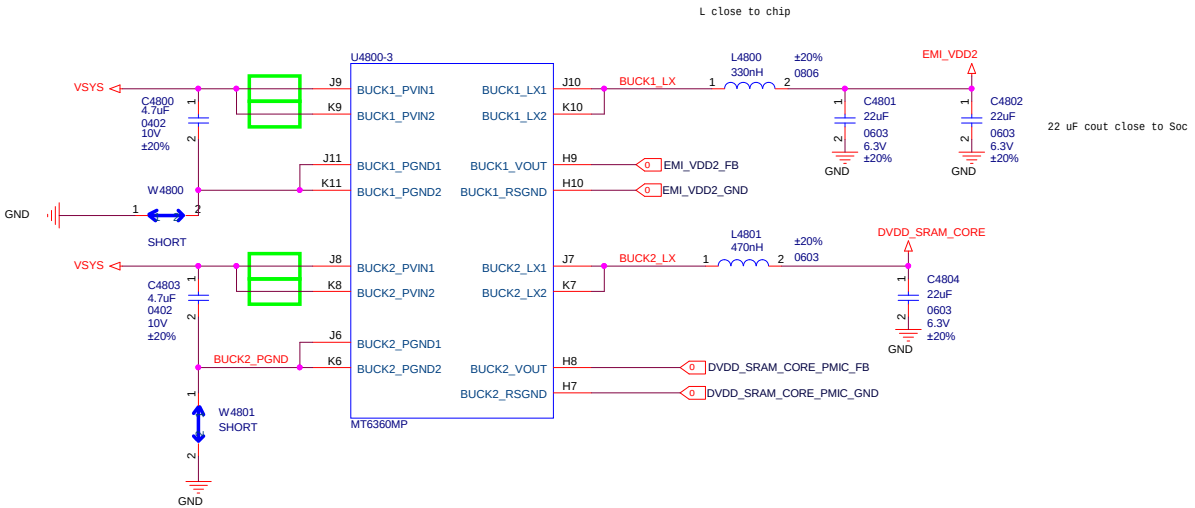


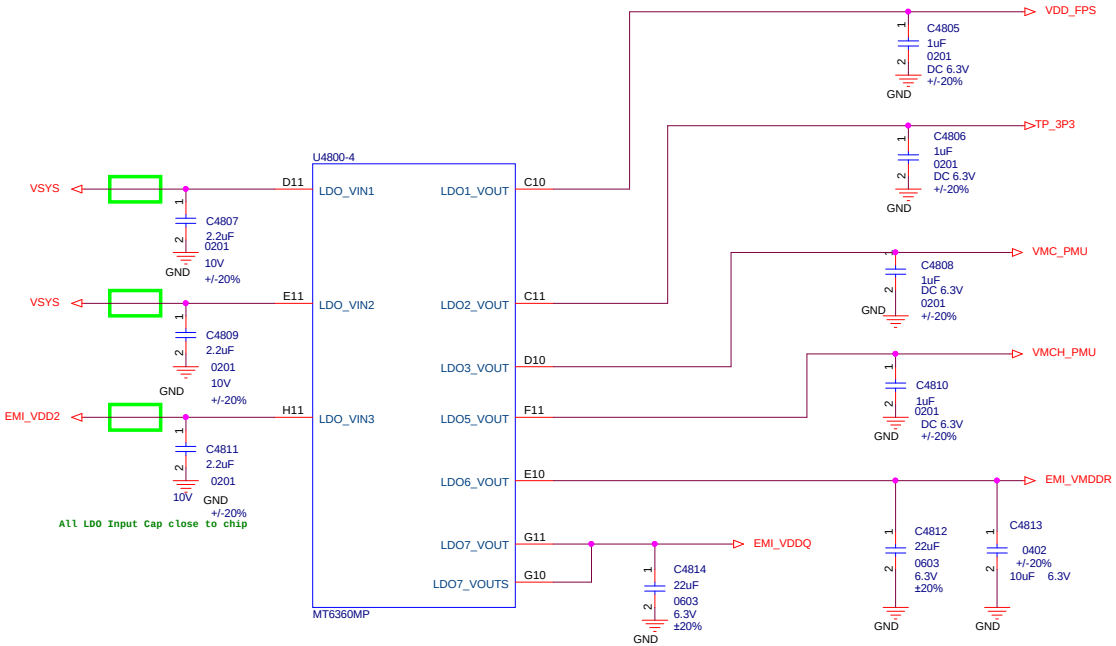


| | |
|---|---|
| LDO1 | VFP |
| LDO2 | VTP |
| LDO3 | VMC |
| LDO5 | VMCH |
| LDO6 | VMDDR |
| LDO7 | VMDDR_EN |

| MI PHONE | | |
|---|---|---|
| Title | MT6873_5GA | |
| Size A3 | Document Number MT6360_BUCK_LDO | Rev |
| Date: Tuesday, March 24, 2020 | Sheet 50 of 73 | |

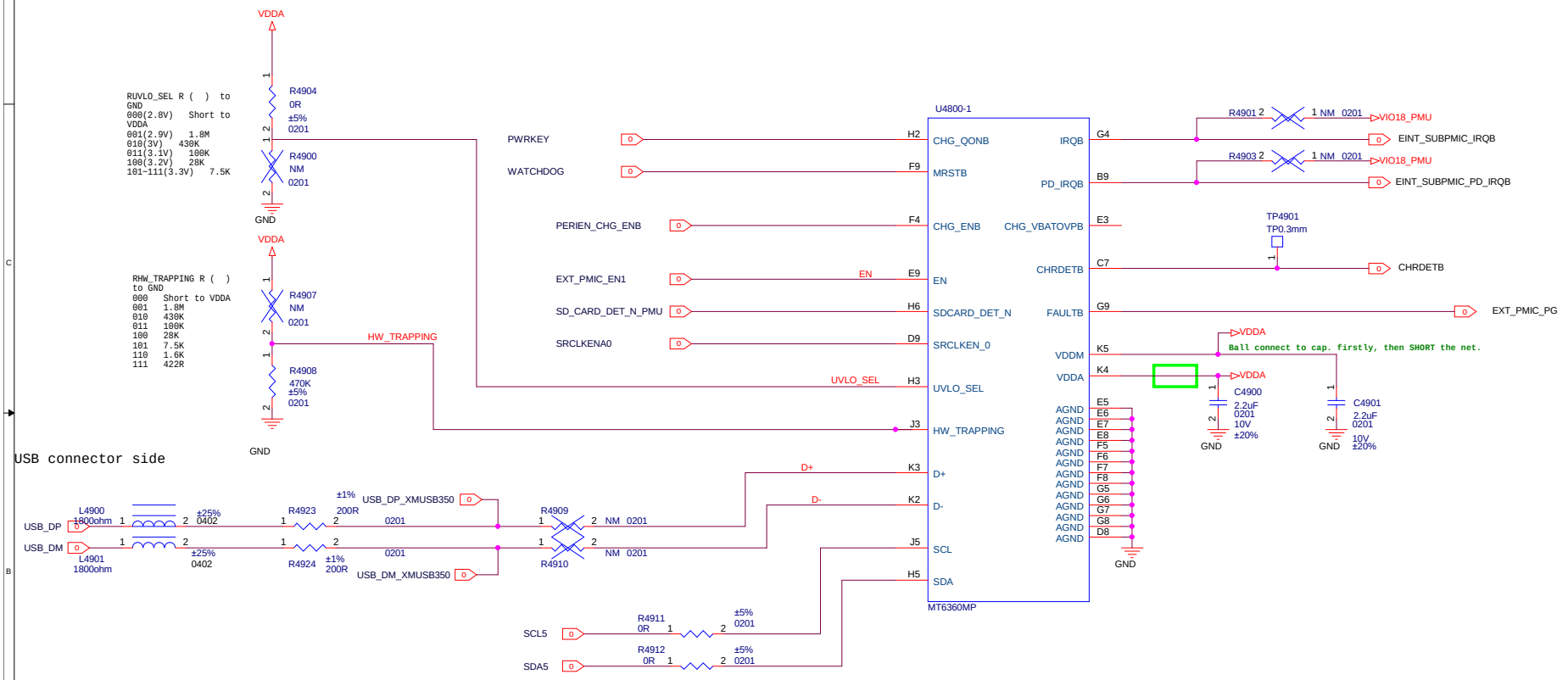


| MI PHONE | | |
|---|---|---|
| Title: MT6873_5GA | | |
| Size: A3 | Document Number: MT6360_General | Rev |
| Date: Tuesday, March 24, 2020 | Sheet 51 of 73 | |

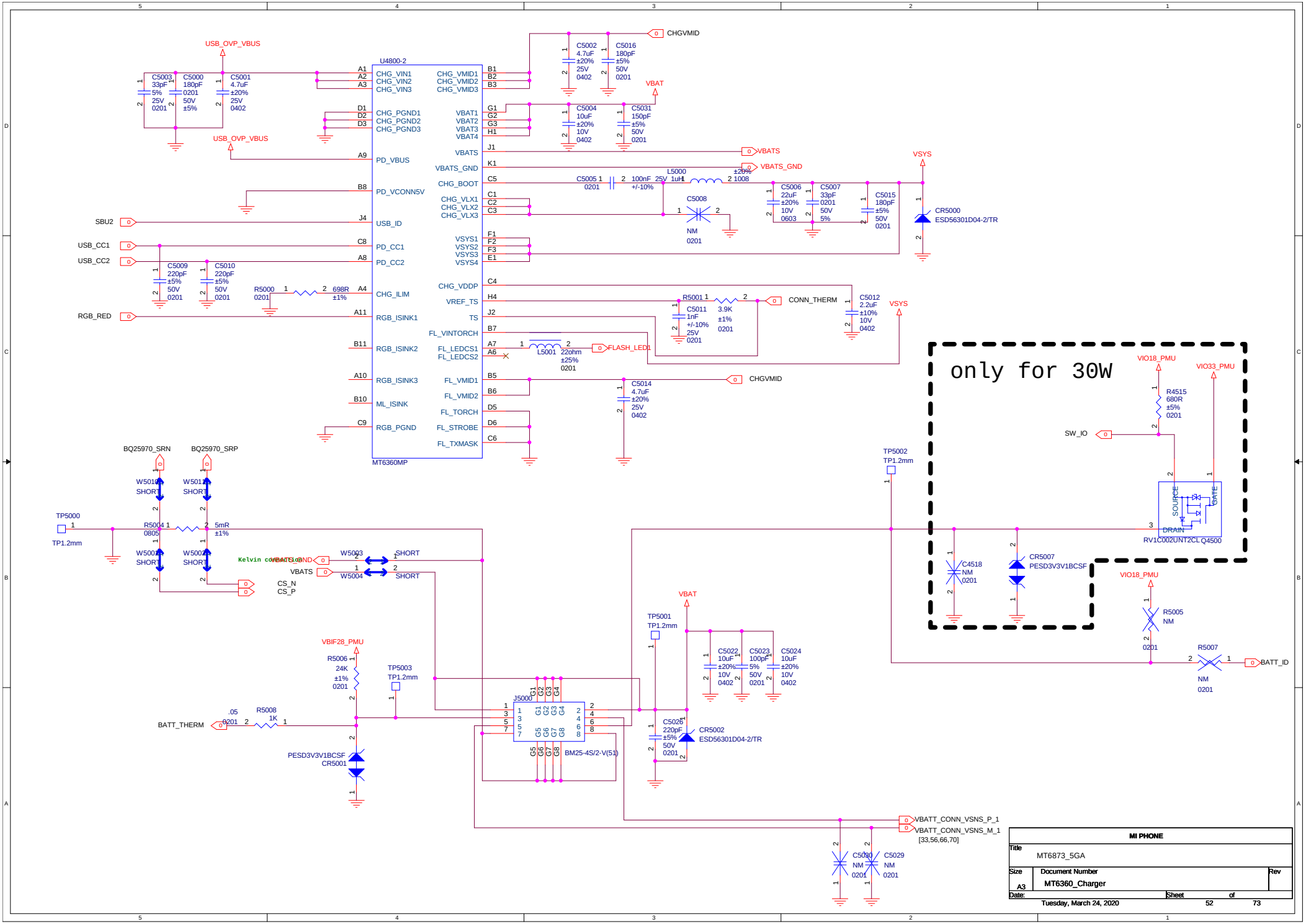
U4800-2
MT6360MP
CHG_VIN1
CHG_VIN2
CHG_VIN3
CHG_PGND1
CHG_PGND2
CHG_PGND3
PD_VBUS
PD_VCONN5V
USB_ID
PD_CC1
PD_CC2
CHG_ILIM
RGB_ISINK1
RGB_ISINK2
RGB_ISINK3
ML_ISINK
RGB_PGND
CHG_VMID1
CHG_VMID2
CHG_VMID3
VBAT1
VBAT2
VBAT3
VBAT4
VBATS
VBATS_GND
CHG_BOOT
CHG_VLX1
CHG_VLX2
CHG_VLX3
VSYS1
VSYS2
VSYS3
VSYS4
CHG_VDDP
VREF_TS
TS
FL_VINTORCH
FL_LEDCS1
FL_LEDCS2
FL_VMID1
FL_VMID2
FL_TORCH
FL_STROBE
FL_TXMASK
USB_OVP_VBUS
CHGVMID
VBAT
VSYS
SBU2
USB_CC1
USB_CC2
RGB_RED
CONN_THERM
FLASH_LED1
BQ25970_SRN
BQ25970_SRP
TP5000
TP1.2mm
R5004
5mR
Kelvin connection
CS_N
CS_P
VBIF28_PMU
R5006
24K
TP5003
BATT_THERM
R5008
1K
PESD3V3V1BCSF
CR5001
J5000
BM25-4S/2-V(51)
TP5001
CR5002
ESD56301D04-2/TR
TP5002
only for 30W
VIO18_PMU
VIO33_PMU
R4515
680R
SW_IO
SOURCE
GATE
DRAIN
RV1C002UNT2CL Q4500
C4518
NM
CR5007
PESD3V3V1BCSF
R5005
R5007
BATT_ID
VBATT_CONN_VSNS_P_1
VBATT_CONN_VSNS_M_1
[33,56,66,70]
C5030
C5029
CR5000
ESD56301D04-2/TR
MI PHONE
Title
MT6873_5GA
Size
A3
Document Number
MT6360_Charger
Rev
Date:
Tuesday, March 24, 2020
Sheet
52
of
73

| MI PHONE | | |
|---|---|---|
| Title | MT6873_5GA | |
| Size C | Document Number Reserved(for charger) | Rev |
| Date: Tuesday, January 14, 2020 | Sheet 53 of 73 | |

| MI PHONE | | |
|---|---|---|
| Title | MT6873_5GA | |
| Size C | Document Number Reserved(for SMB1355) | Rev |
| Date: Tuesday, January 14, 2020 | Sheet 54 of 73 | |

| MI PHONE | | |
|---|---|---|
| Title | MT6873_5GA | |
| Size C | Document Number Reserved(for SMB1355) | Rev |
| Date: Tuesday, January 14, 2020 | Sheet 55 of 73 | |

| MI PHONE | | |
|---|---|---|
| Title | MT6873_5GA | |
| Size C | Document Number Reserved(for SMB1355) | Rev |
| Date: Tuesday, January 14, 2020 | Sheet 56 of 73 | |

25970

Master

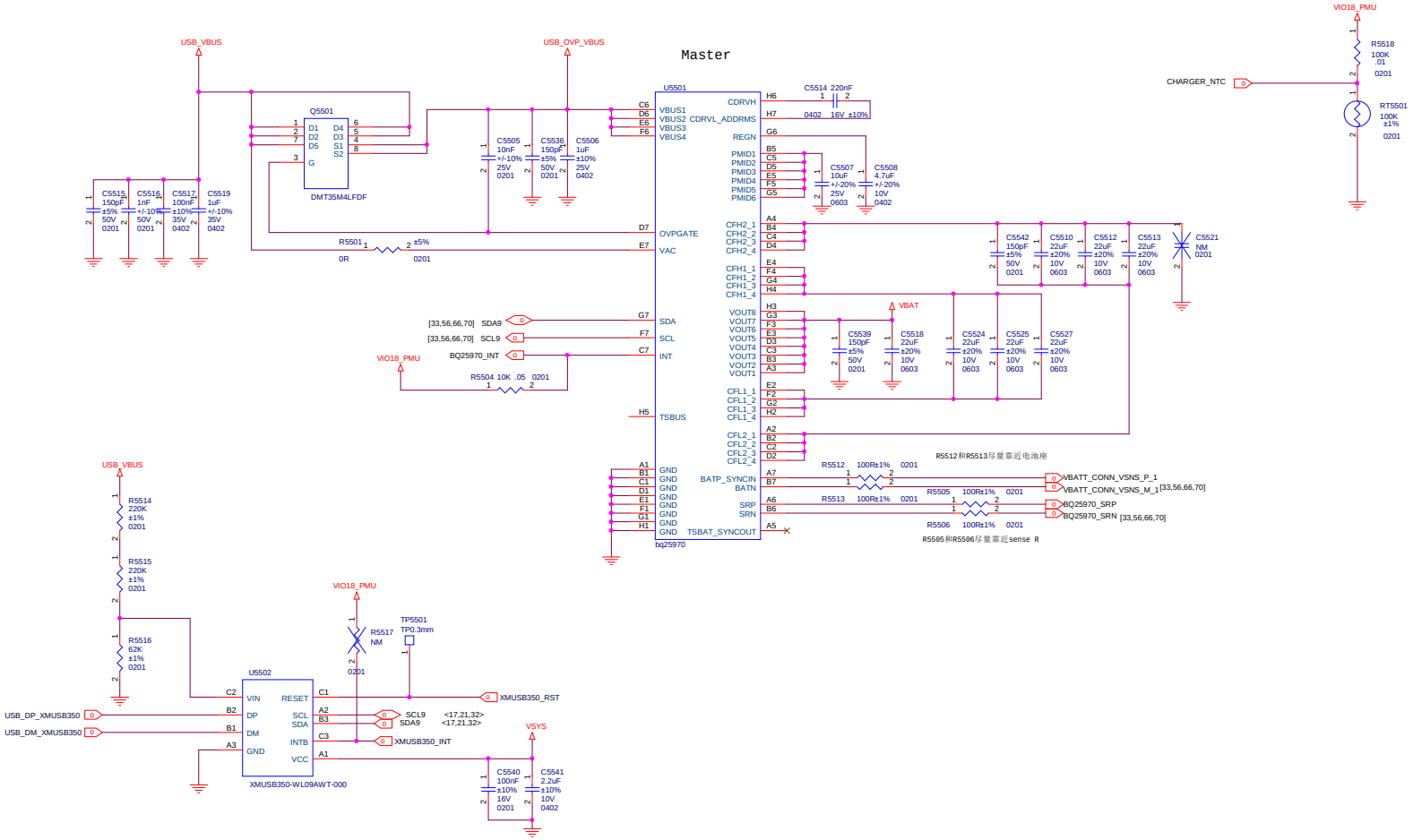


| | | |
|---|---|---|
| MI PHONE | | |
| Title | MT6873_5GA | |
| Size C | Document Number Reserved(for SMB1355) | Rev |
| Date: Tuesday, March 24, 2020 | Sheet 57 of 73 | |

| MI PHONE | | |
|---|---|---|
| Title | MT6873_5GA | |
| Size A3 | Document Number Reserved(for WCD) | Rev P0 |
| Date: Tuesday, January 14, 2020 | Sheet 60 of 73 | |

| MI PHONE | | |
|---|---|---|
| Title | MT6873_5GA | |
| Size A3 | Document Number Reserved(for WCD) | Rev P0 |
| Date: Tuesday, January 14, 2020 | Sheet 61 of 73 | |

# A+G

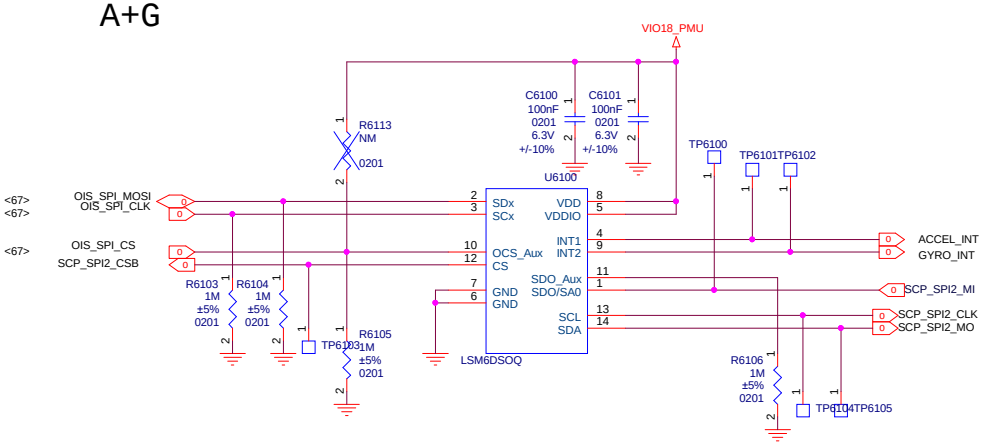


# INFARED

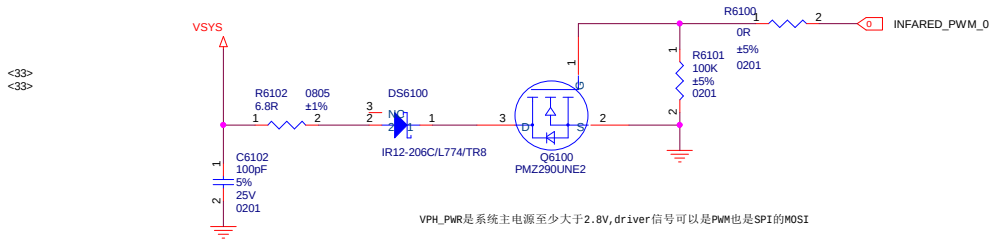


# ALS+PS Connector

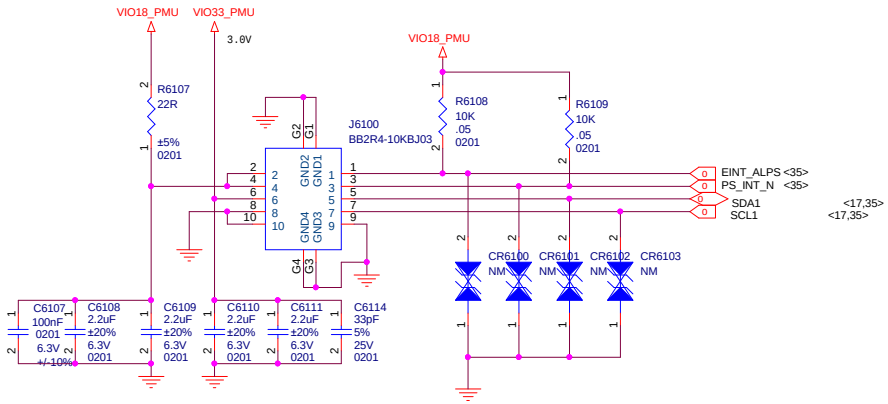


# HAPTICS

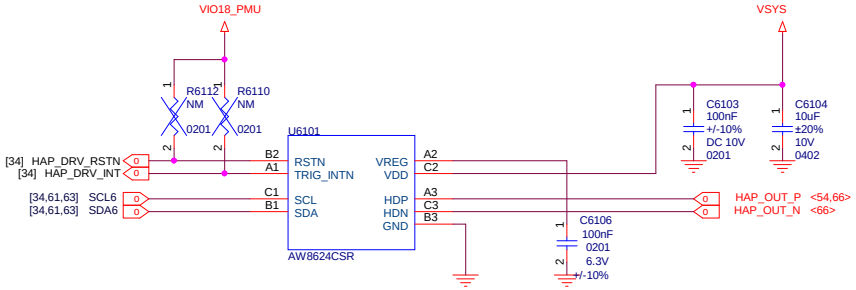


# COMPASS

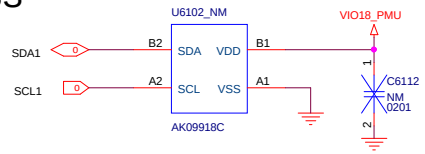


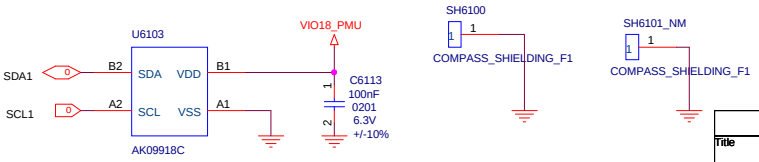


| | | |
|---|---|---|
| MI PHONE | | |
| Title: MT6873_5GA | | |
| Size: A3 | Document Number: SENSOR_1 | Rev: P0 |
| Date: Tuesday, March 24, 2020 | Sheet 61 of 1 | |

# Receiver

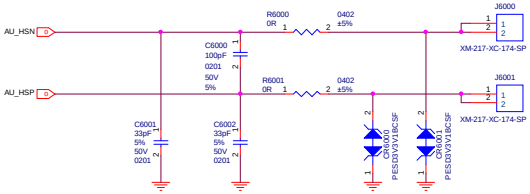


# Earphone Microphone

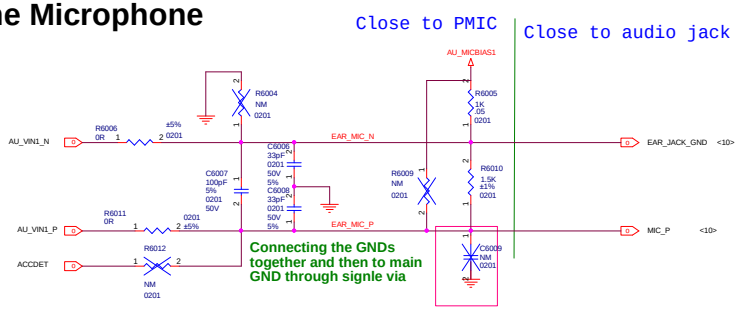


# HEADSET

# SPKR PA

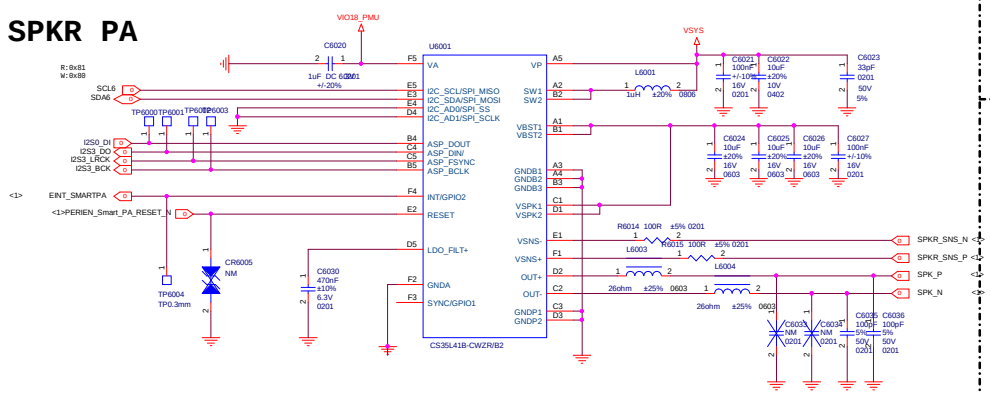


# Second MIC

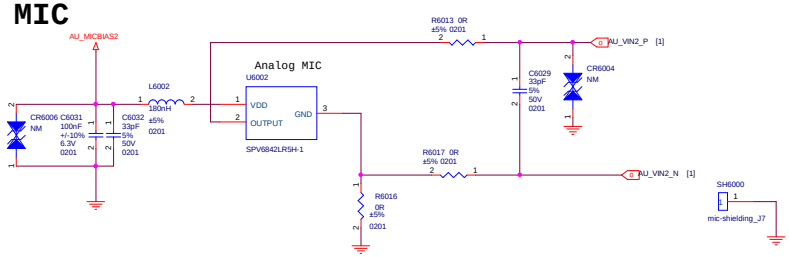


| | | |
|---|---|---|
| MI PHONE | | |
| Title: MT6873_5GA | | |
| Size: A2 | Document Number: AUDIO | Rev: P0 |
| Date: Tuesday, March 24, 2020 | Sheet 62 of 73 | |

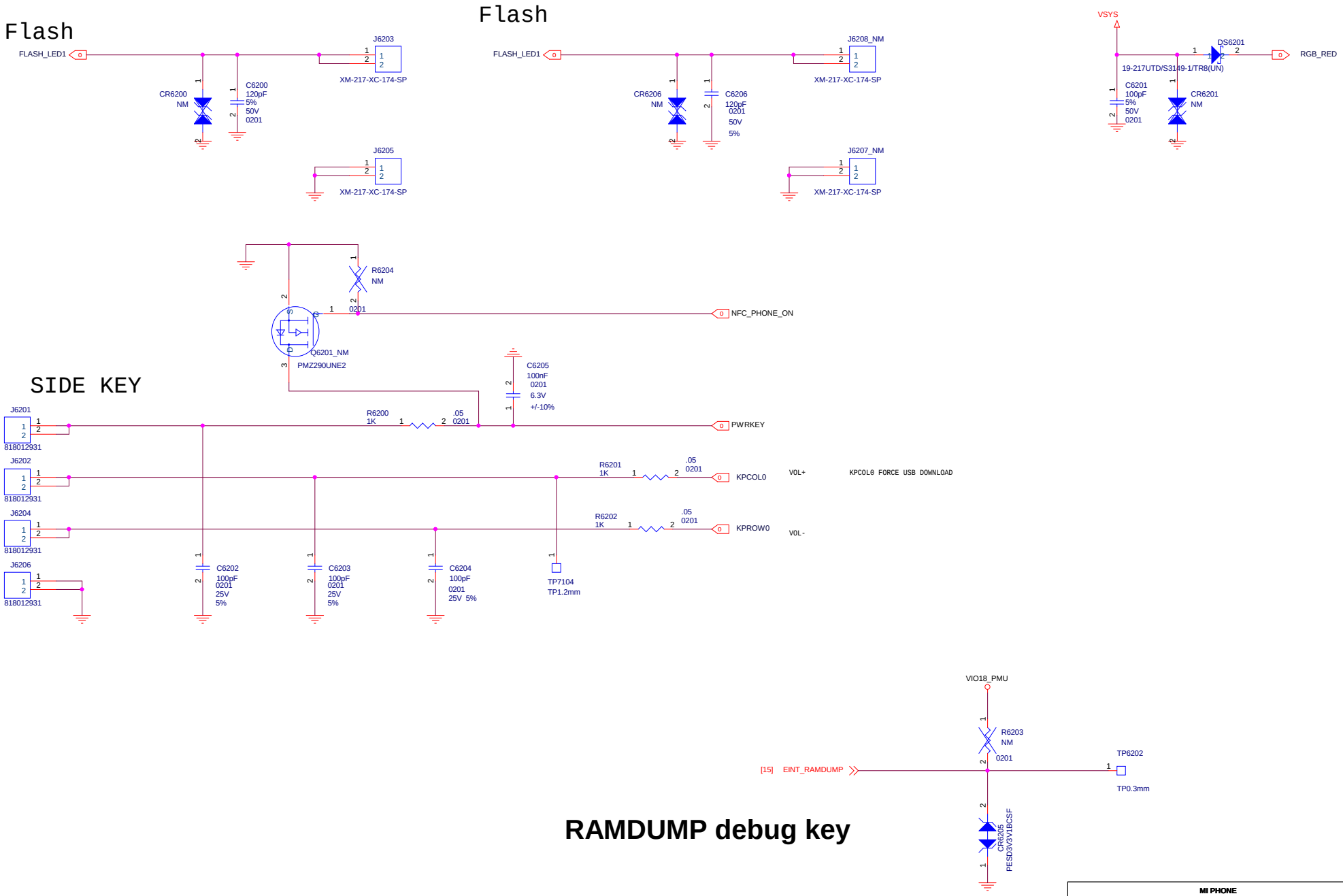


| MI PHONE | | |
|---|---|---|
| Title: MT6873_5GA | | |
| Size: A3 | Document Number: SENSOR-2 | Rev: P0 |
| Date: Tuesday, March 31, 2020 | Sheet 64 of 73 | |

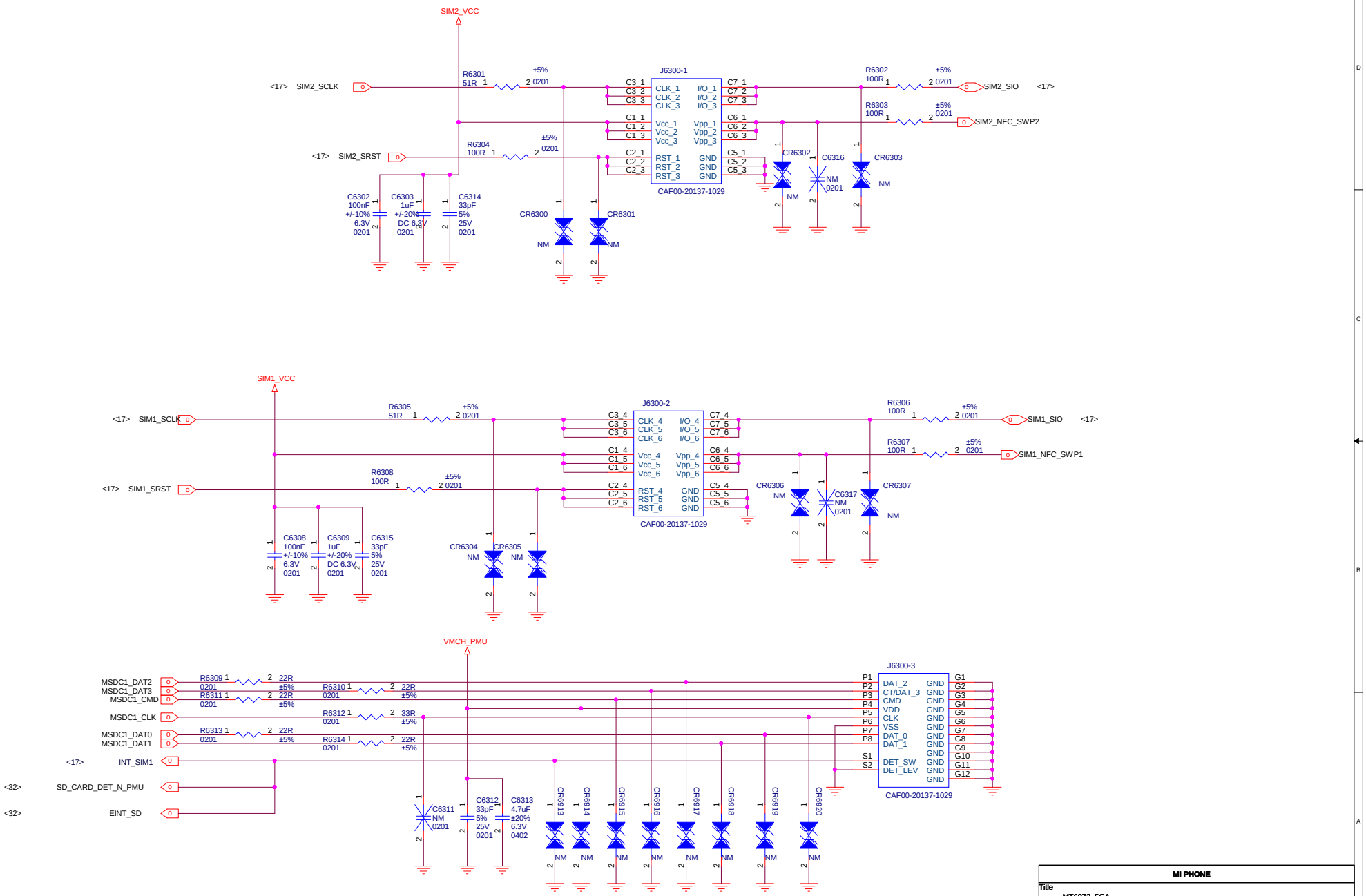


| | | |
|---|---|---|
| MI PHONE | | |
| Title: MT6873_5GA | | |
| Size: A3 | Document Number: SIM CONNECTOR | Rev: P0 |
| Date: | Sheet 65 of 73 | |

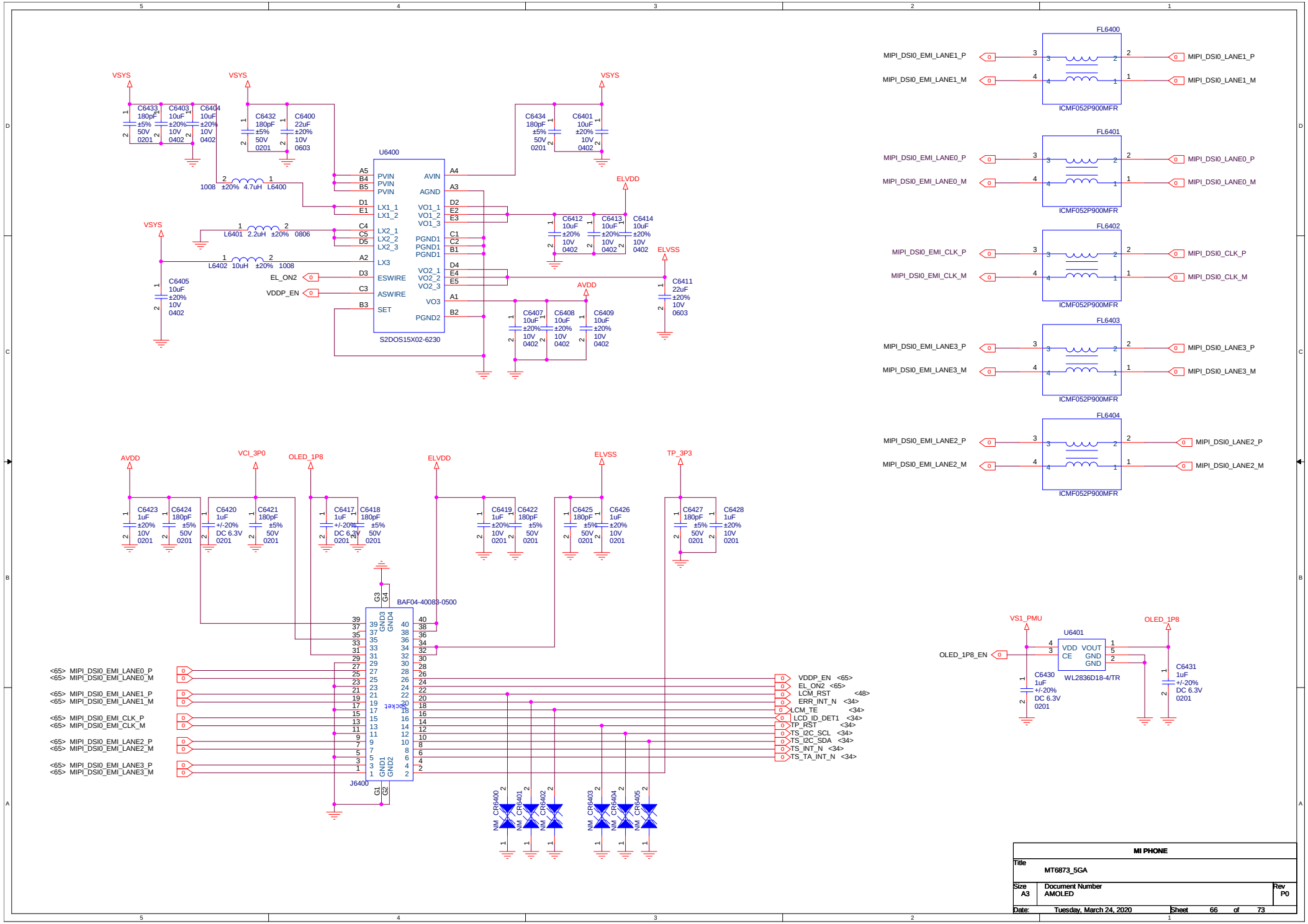
VSYS
C6433 180pF ±5% 50V 0201
C6403 10uF ±20% 10V 0402
C6404 10uF ±20% 10V 0402
C6432 180pF ±5% 50V 0201
C6400 22uF ±20% 10V 0603
C6434 180pF ±5% 50V 0201
C6401 10uF ±20% 10V 0402
U6400
PVIN
AVIN
AGND
LX1_1
LX1_2
VO1_1
VO1_2
VO1_3
LX2_1
LX2_2
LX2_3
PGND1
LX3
ESWIRE
ASWIRE
SET
VO2_1
VO2_2
VO2_3
VO3
PGND2
S2DOS15X02-6230
1008 ±20% 4.7uH L6400
L6401 2.2uH ±20% 0806
L6402 10uH ±20% 1008
EL_ON2
VDDP_EN
C6405 10uF ±20% 10V 0402
ELVDD
C6412 10uF ±20% 10V 0402
C6413 10uF ±20% 10V 0402
C6414 10uF ±20% 10V 0402
ELVSS
C6411 22uF ±20% 10V 0603
AVDD
C6407 10uF ±20% 10V 0402
C6408 10uF ±20% 10V 0402
C6409 10uF ±20% 10V 0402
FL6400
MIPI_DSI0_EMI_LANE1_P
MIPI_DSI0_EMI_LANE1_M
ICMF052P900MFR
FL6401
MIPI_DSI0_EMI_LANE0_P
MIPI_DSI0_EMI_LANE0_M
FL6402
MIPI_DSI0_EMI_CLK_P
MIPI_DSI0_EMI_CLK_M
FL6403
MIPI_DSI0_EMI_LANE3_P
MIPI_DSI0_EMI_LANE3_M
FL6404
MIPI_DSI0_EMI_LANE2_P
MIPI_DSI0_EMI_LANE2_M
VCI_3P0
OLED_1P8
TP_3P3
C6423 1uF ±20% 10V 0201
C6424 180pF ±5% 50V 0201
C6420 1uF +/-20% DC 6.3V 0201
C6421 180pF ±5% 50V 0201
C6417 1uF +/-20% DC 6.3V 0201
C6418 180pF ±5% 50V 0201
C6419 1uF ±20% 10V 0201
C6422 180pF ±5% 50V 0201
C6425 180pF ±5% 50V 0201
C6426 1uF ±20% 10V 0201
C6427 180pF ±5% 50V 0201
C6428 1uF ±20% 10V 0201
BAF04-40083-0500
J6400
Socket
<65> MIPI_DSI0_EMI_LANE0_P
<65> MIPI_DSI0_EMI_LANE0_M
<65> MIPI_DSI0_EMI_LANE1_P
<65> MIPI_DSI0_EMI_LANE1_M
<65> MIPI_DSI0_EMI_CLK_P
<65> MIPI_DSI0_EMI_CLK_M
<65> MIPI_DSI0_EMI_LANE2_P
<65> MIPI_DSI0_EMI_LANE2_M
<65> MIPI_DSI0_EMI_LANE3_P
<65> MIPI_DSI0_EMI_LANE3_M
VDDP_EN <65>
EL_ON2 <65>
LCM_RST <48>
ERR_INT_N <34>
LCM_TE <34>
LCD_ID_DET1 <34>
TP_RST <34>
TS_I2C_SCL <34>
TS_I2C_SDA <34>
TS_INT_N <34>
TS_TA_INT_N <34>
CR6400
CR6401
CR6402
CR6403
CR6404
CR6405
VS1_PMU
U6401
OLED_1P8_EN
VDD VOUT
CE GND
GND
WL2836D18-4/TR
C6430 1uF +/-20% DC 6.3V 0201
C6431 1uF +/-20% DC 6.3V 0201
MI PHONE
Title
MT6873_5GA
Size A3
Document Number AMOLED
Rev P0
Date: Tuesday, March 24, 2020
Sheet 66 of 73

## Schematic design notice of "90_DEBUG_IO" page.

Note 90-1: UART Default support : UART0,
JTAG Default support : AP JTAG/MD_IO_JTAG

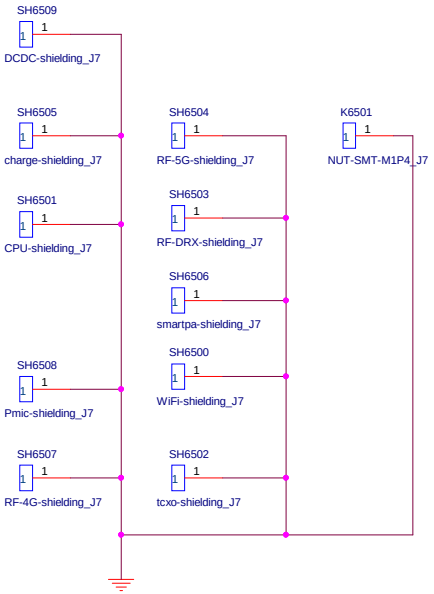

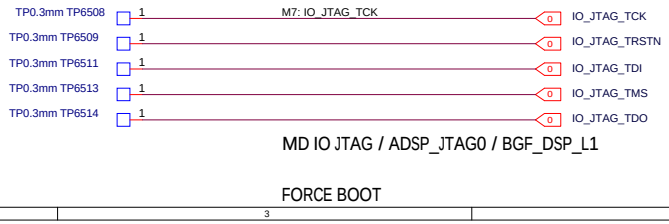


| | | |
|---|---|---|
| MI PHONE | | |
| Title: MT6873_5GA | | |
| Size: A3 | Document Number: DEBUG_IO | Rev: P0 |
| Date: Tuesday, March 24, 2020 | Sheet 67 of 73 | |

# 5M MACRO

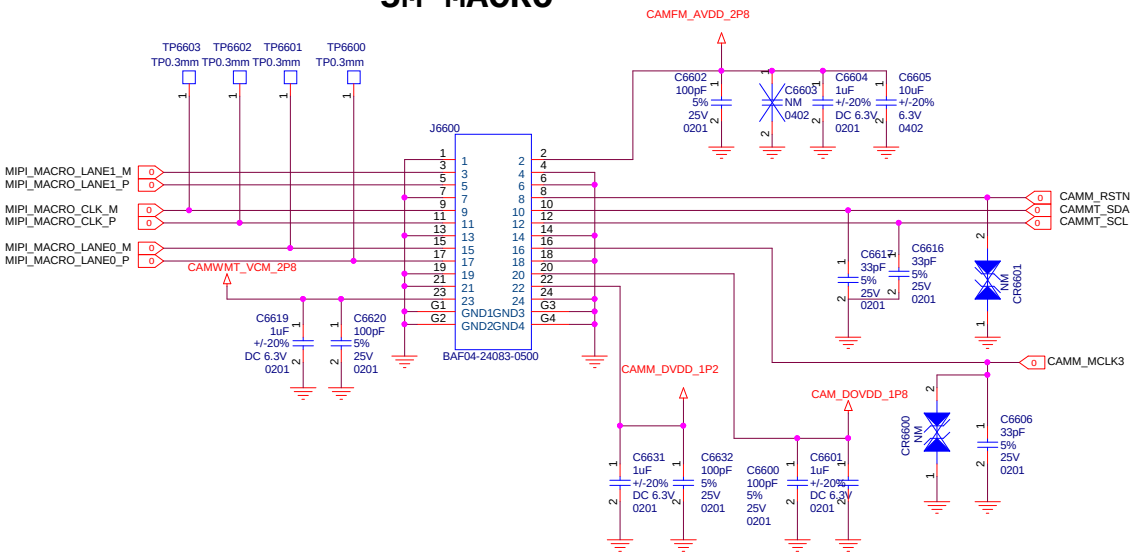


# 8M Ultra

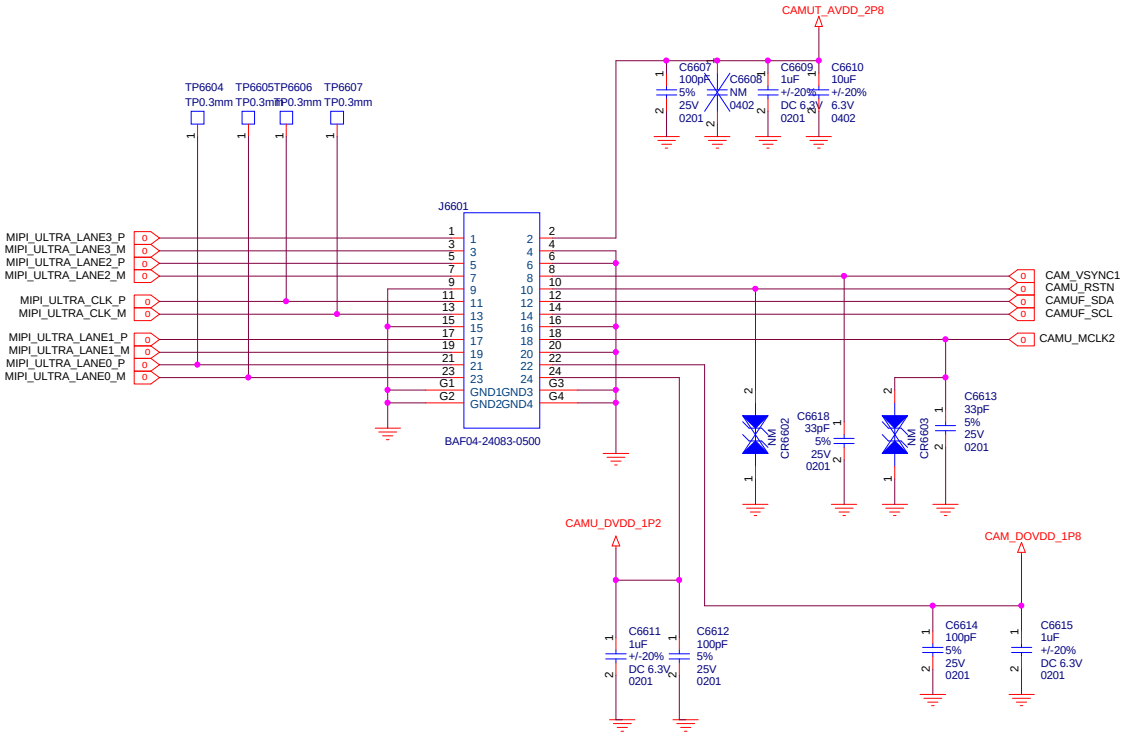


| | | |
|---|---|---|
| MI PHONE | | |
| Title | MT6873_5GA | |
| Size A3 | Document Number 5M MICRO & 8M ULTRA CAM | Rev <RevCode> |
| Date: Tuesday, March 24, 2020 | Sheet 68 of 73 | |

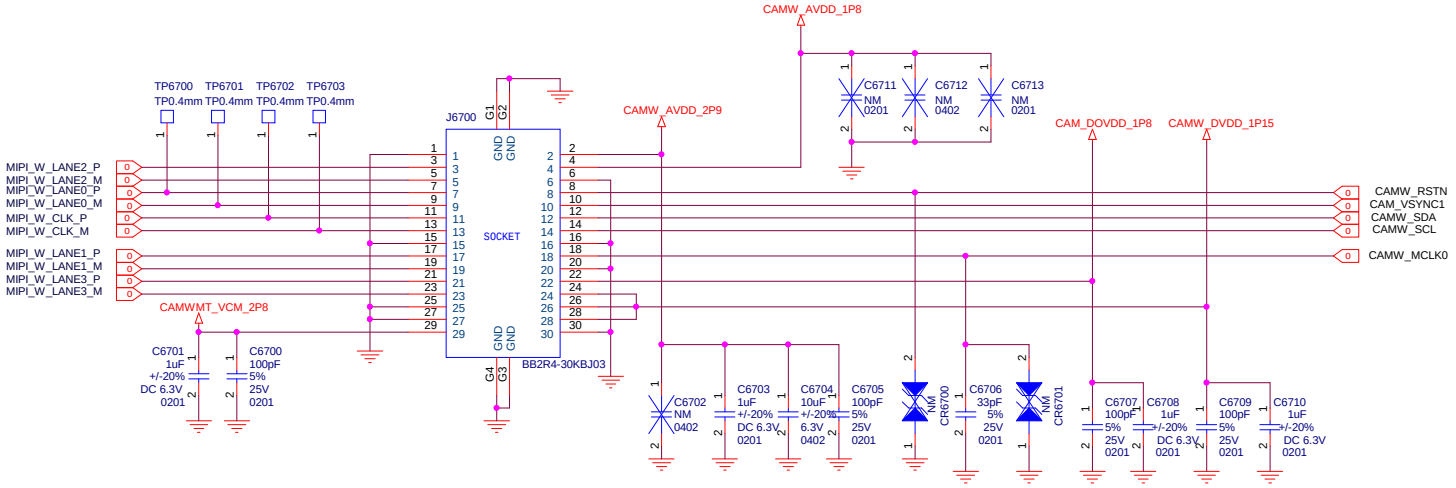


| MI PHONE | | |
|---|---|---|
| Title: MT6873_5GA | | |
| Size: A3 | Document Number: WIDE CAMERA | Rev: P0 |
| Date: Tuesday, March 24, 2020 | Sheet 69 of 73 | |

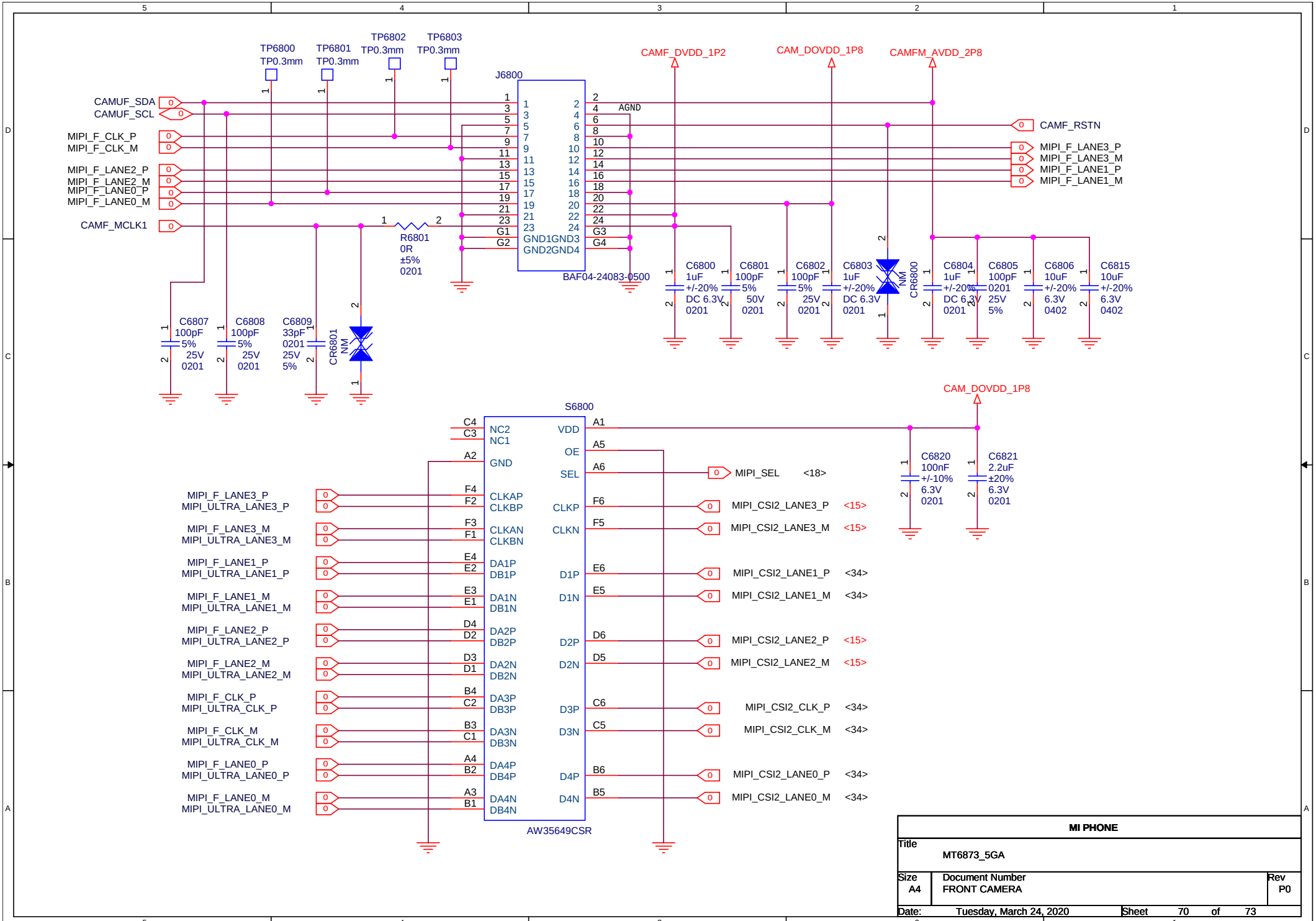
TP6800 TP0.3mm
TP6801 TP0.3mm
TP6802 TP0.3mm
TP6803 TP0.3mm
J6800
BAF04-24083-0500
CAMF_DVDD_1P2
CAM_DOVDD_1P8
CAMFM_AVDD_2P8
AGND
CAMUF_SDA
CAMUF_SCL
MIPI_F_CLK_P
MIPI_F_CLK_M
MIPI_F_LANE2_P
MIPI_F_LANE2_M
MIPI_F_LANE0_P
MIPI_F_LANE0_M
CAMF_MCLK1
CAMF_RSTN
MIPI_F_LANE3_P
MIPI_F_LANE3_M
MIPI_F_LANE1_P
MIPI_F_LANE1_M
R6801 0R ±5% 0201
C6800 1uF +/-20% DC 6.3V 0201
C6801 100pF 5% 50V 0201
C6802 100pF 5% 25V 0201
C6803 1uF +/-20% DC 6.3V 0201
CR6800 NM
C6804 1uF +/-20% DC 6.3V 0201
C6805 100pF 0201 25V 5%
C6806 10uF +/-20% 6.3V 0402
C6815 10uF +/-20% 6.3V 0402
C6807 100pF 5% 25V 0201
C6808 100pF 5% 25V 0201
C6809 33pF 0201 25V 5%
CR6801 NM
S6800
AW35649CSR
CAM_DOVDD_1P8
C6820 100nF +/-10% 6.3V 0201
C6821 2.2uF ±20% 6.3V 0201
MIPI_SEL <18>
MIPI_F_LANE3_P
MIPI_ULTRA_LANE3_P
MIPI_F_LANE3_M
MIPI_ULTRA_LANE3_M
MIPI_F_LANE1_P
MIPI_ULTRA_LANE1_P
MIPI_F_LANE1_M
MIPI_ULTRA_LANE1_M
MIPI_F_LANE2_P
MIPI_ULTRA_LANE2_P
MIPI_F_LANE2_M
MIPI_ULTRA_LANE2_M
MIPI_F_CLK_P
MIPI_ULTRA_CLK_P
MIPI_F_CLK_M
MIPI_ULTRA_CLK_M
MIPI_F_LANE0_P
MIPI_ULTRA_LANE0_P
MIPI_F_LANE0_M
MIPI_ULTRA_LANE0_M
MIPI_CSI2_LANE3_P <15>
MIPI_CSI2_LANE3_M <15>
MIPI_CSI2_LANE1_P <34>
MIPI_CSI2_LANE1_M <34>
MIPI_CSI2_LANE2_P <15>
MIPI_CSI2_LANE2_M <15>
MIPI_CSI2_CLK_P <34>
MIPI_CSI2_CLK_M <34>
MIPI_CSI2_LANE0_P <34>
MIPI_CSI2_LANE0_M <34>
MI PHONE
Title
MT6873_5GA
Size A4
Document Number FRONT CAMERA
Rev P0
Date: Tuesday, March 24, 2020
Sheet 70 of 73

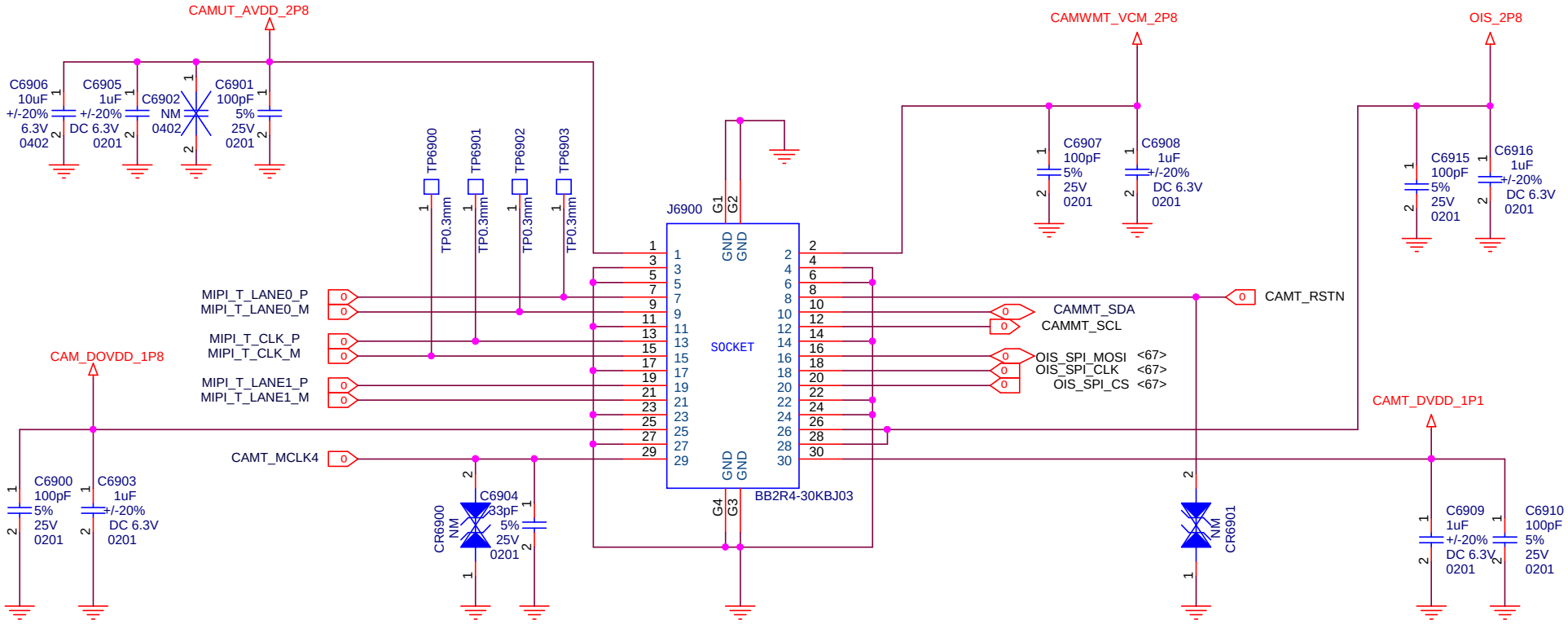


| | | |
|---|---|---|
| MI PHONE | | |
| Title: MT6873_5GA | | |
| Size: A4 | Document Number: 8M TELE CAMERA | Rev: P0 |
| Date: Tuesday, March 24, 2020 | Sheet 71 of 73 | |